Standard AC Motors

Constant Speed Motors

Single-Phase Induction Motors

Features and Types of Single-Phase Induction Motors

6 W (1/125 HP)
15 W (1/50 HP)
25 W (1/30 HP)
40 W (1/19 HP)
60 W (1/12 HP)
90 W (1/8 HP)
BH Series 200 W (1/4 HP)
2-Pole High-Speed 40-150 W (1/19-1/5 HP)

Features of Single-Phase Induction Motors

Optimal for Uni-Directional and Continuous Operation

Induction motors are optimal for uni-directional and continuous operation such as a conveyor system.

Easy Operation

All you need is to connect a capacitor and plug the motor into an AC power supply and the motor can be easily operated.

Extensive Product Line

The **KII** Series, World **K** Series and **BH** Series are available.
We have products with an output power range of 6 W (1/125 HP) to 200 W (1/4 HP), so you can find a motor that meets your specific application.

Compatible with Various Gearheads

Combination with a gearhead allows the motor speed to be reduced to the required speed or generate higher torque.

Types of Single-Phase Induction Motors

Series	Features, Product Line
KII Series 	**New Global Standard** With a high performance gearhead built in, it is the new global standard for standard AC motors. Features of the **KII** Series ➜ Page C-115 **Conforms to Standards** **Product Line** Frame Size: □60 mm (□2.36 in.)~□90 mm (□3.54 in.) Output Power: Terminal Box Type: 25 W~90 W (1/30 HP~1/8 HP); Lead Wire Type: 6 W~90 W (1/125 HP~1/8 HP) Type: Terminal Box Type: Parallel shaft; Lead Wire Type: Parallel shaft Voltage: Single-Phase 110/115 VAC, Single-Phase 220/230 VAC
World **K** Series 2-Pole, High-Speed Type 	**Conforms to Standards** All World **K** Series products have an overheat protection device built-in and conform to major safety standards. • **Applicable Standards** UL/CSA Standards Certified under the China Compulsory Certification System (CCC System) CE Marking (Low Voltage Directive) • **Motor Overheat Protection Device** Thermal Protector **Product Line** Frame Size: □80 mm (□3.15 in.), □90 mm (□3.54 in.) Output Power: 2-Pole, High-Speed Type: 40 W~150 W (1/19 HP~1/5 HP) Voltage: Single-Phase 110/115 VAC, Single-Phase 220/230 VAC
BH Series 	**Smallest Frame Size among 200 W (1/4 HP) Motors** These motors achieve a high output of 200 W (1/4 HP) with a frame size of 104 mm (4.09 in.). **Hypoid Gear Right Angle Type is Available.** **"Combination Type" for Easy Installation** With each combination type, the motor and gearhead come pre-assembled for easy installation into your equipment. **Conforms to Standards and Global Voltage Specifications** **Tapped Hole at the Shaft End** The gearhead shaft features a tapped hole for convenient connection with loads. **Product Line** Frame Size: □104 mm (□4.09 in.) Output Power: 200 W (1/4 HP) Type: Terminal Box Type: Right-Angle, Hollow Shaft Type, Right-Angle, Solid Shaft Type, Parallel Shaft Type, Round Shaft Type; Cable Type: Right-Angle, Hollow Shaft Type, Right-Angle, Solid Shaft Type, Parallel Shaft Type, Round Shaft Type Voltage: Single-Phase 110/115 VAC, Single-Phase 220/230 VAC

KII Series Features

Excellent Motor Performance

The magnetic balance for each input voltage has been re-examined and the motors have been specially designed to optimize their characteristics.
Designing specifically for each voltage not only improves efficiency, but also contributes to equipment reliability by reducing heat and vibration generated by the motor.

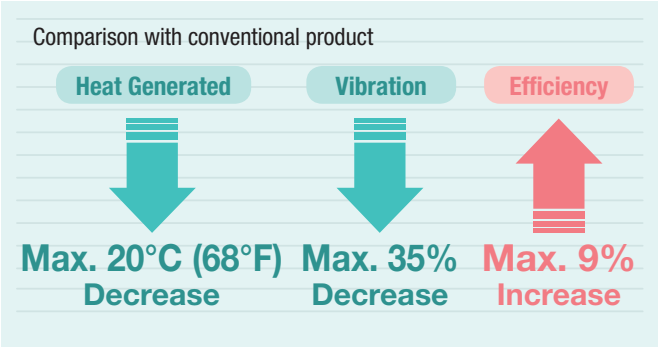

Energy Savings

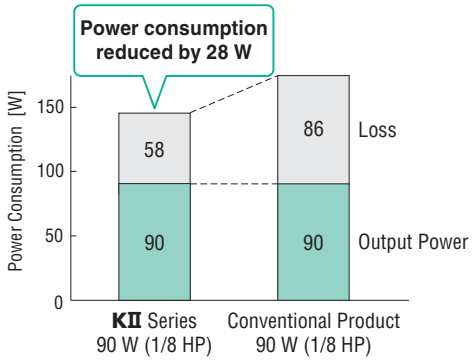

[For 90 W (1/8 HP) Output Power Single-phase 200 VAC 60 Hz]

Built-In Slim Body Terminal Box (Terminal box type)

A new shape of terminal box was designed to make wiring the terminal block easier. It is slimmer than conventional products, and the cable outlet can be rotated in 90° increments for 4 possible directions.

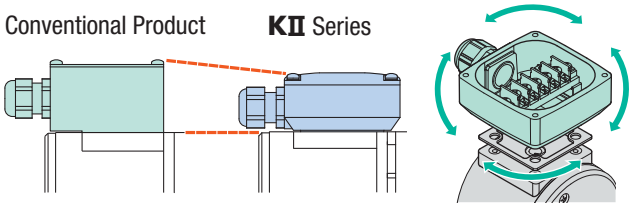

IP66 Compliant Drip-proof Specification

The seal structure for the motor, gearhead and terminal box components has been strengthened. The terminal box type is compliant with the IP66 degree of protection.

IP66:
The IP indication that shows the watertight and dust-resistant performance are specified under IEC 60529 and IEC 60034-5.

Main Specifications
- Material
Case and terminal box: Aluminum
Output shaft: S45C
Screws: Stainless steel (externally facing screws only)
- Surface Treatment
Case and terminal box: Painted (excluding installation surface)

Equipped with a High-Performance Gearhead

High Permissible Torque

The permissible torque is up to twice that of conventional products.

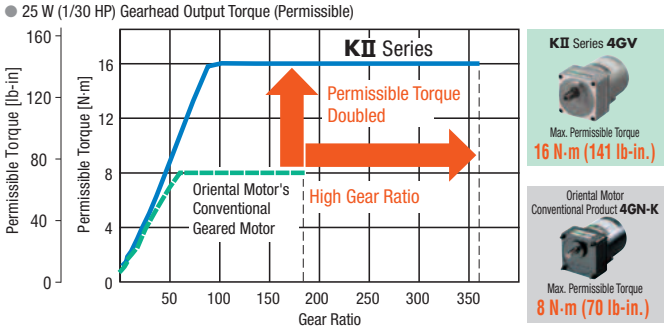

◇Downsizing is Possible with the Same Output Torque

Downsizing is possible by changing our company's conventional products with the **KII** Series. If a smaller size motor can be selected, not only the power consumption but also the purchase cost can be reduced.

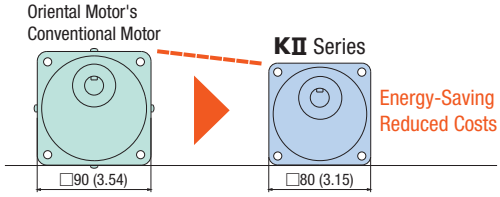

Oriental Motor's Conventional Motor	KII Series
Frame Size: □90 mm (3.54 in.)	Frame Size: □80 mm (3.15 in.)
Motor Output: 40 W (1/19 HP)	Motor Output: 25 W (1/30 HP)
Permissible Torque: 10 N·m (88 lb-in)	Permissible Torque: 16 N·m (141 lb-in)
Power Consumption: 72 W	Power Consumption: 47 W
List Price $209.00	List Price $153.00

High Strength

The permissible radial load and the permissible axial load are up to twice that of conventional products.

Oriental Motor Conventional Product 4GN-K	KII Series 4GV
Permissible Radial Load... 200 N (45 lb.)	Permissible Radial Load... 450 N (101 lb.)
Permissible Axial Load... 50 N (11.2 lb.)	Permissible Axial Load... 100 N (22 lb.)

Long-Life

At 10,000 hours, the rated life is twice that of a conventional product.

Noise Reduction

The contact noise of the motor and gearhead is approximately 6 dB less compared to a conventional product.

6 W (1/125 HP)
15 W (1/50 HP)
25 W (1/30 HP)
40 W (1/19 HP)
60 W (1/12 HP)
90 W (1/8 HP)
BH Series 200 W (1/4 HP)
2-Pole High-Speed 40-150 W (1/19-1/5 HP)

Product Line of Induction Motors

Series	Voltage (VAC)	Type	Motor Frame Size, Output Power									
			□60 mm (□2.36 in.)	□70 mm (□2.76 in.)	□80 mm (□3.15 in.)			□90 mm (□3.54 in.)				□104 mm (□4.09 in.)
			6 W (1/125 HP)	15 W (1/50 HP)	25 W (1/30 HP)	40 W (1/19 HP)	60 W (1/12 HP)	40 W (1/19 HP)	60 W (1/12 HP)	90 W (1/8 HP)	150 W (1/5 HP)	200 W (1/4 HP)
KII Series	Single-Phase 110/115	Terminal Box			●			●	●	●		
		Lead Wire	●	●	●			●	●	●		
	Single-Phase 220/230	Terminal Box			●			●	●	●		
		Lead Wire	●	●	●			●	●	●		
World **K** Series 2-Pole, High-Speed Type	Single-Phase 110/115	Lead Wire				●	●		●	●	●	
	Single-Phase 220/230	Lead Wire				●	●		●	●	●	
BH Series	Single-Phase 110/115	Terminal Box										●
		Cable										●
	Single-Phase 220/230	Terminal Box										●
		Cable										●

System Configuration

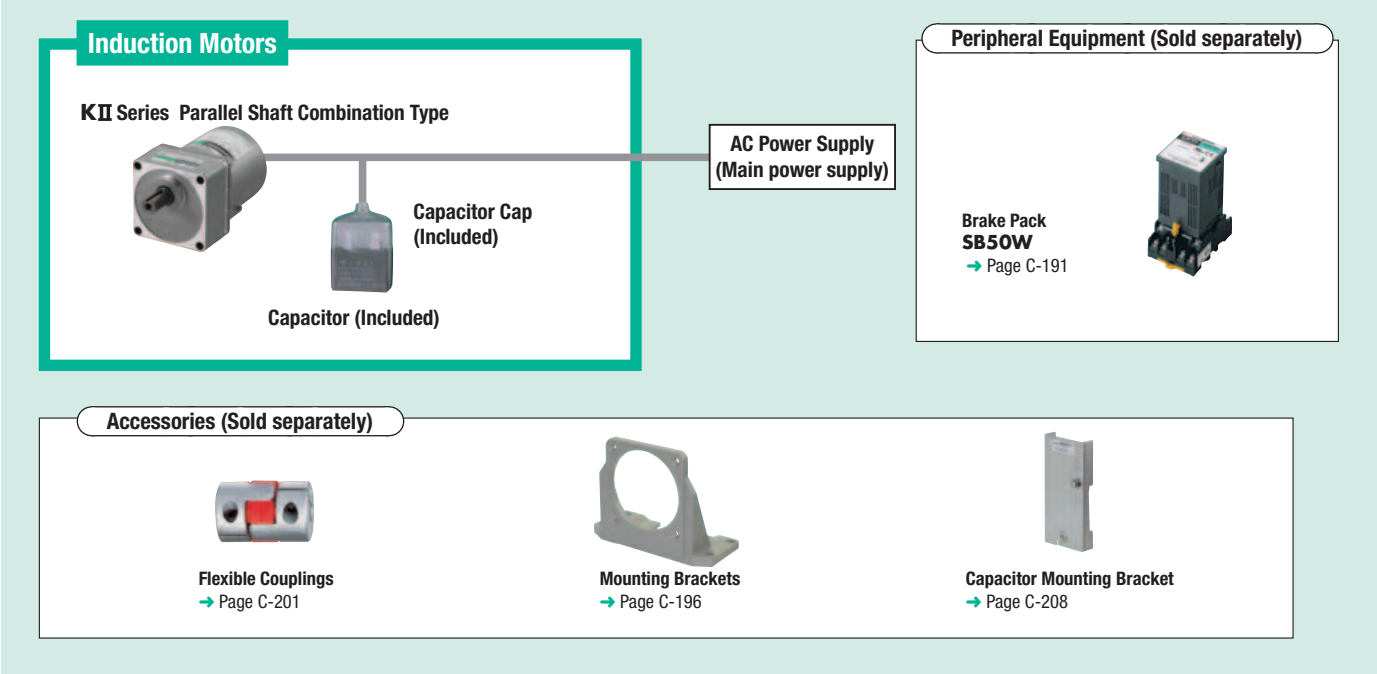

●Example of System Configuration

Induction Motors Parallel Shaft Combination Type	+	Sold Separately	
		Mounting Bracket	Flexible Couplings
4IK25UA-25A		SOL4UAF	MCL40F10F10
$146.00		$27.00	$76.00

● The system configuration shown above is an example. Other combinations are also available.

6 W (1/125 HP)
15 W (1/50 HP)
25 W (1/30 HP)
40 W (1/19 HP)
60 W (1/12 HP)
90 W (1/8 HP)
BH Series 200 W (1/4 HP)
2-Pole High-Speed 40-150 W (1/19-1/5 HP)

Product Number

●KⅡ Series

4 I K 25 UA T2 - 12.5 A

① ② ③ ④ ⑤ ⑥ ⑦ ⑧

①	Motor Frame Size	**2**: 60 mm (2.36 in.) **3**: 70 mm (2.76 in.) **4**: 80 mm (3.15 in.) **5**: 90 mm (3.54 in.)
②	Motor Type	**I**: Induction Motor
③	Series	**K**: **KⅡ** Series
④	Output Power (W)	(Example) **25**: 25 W (1/30 HP)
⑤	Power Supply Voltage	**UA**: Single-Phase 110/115 VAC **UC**: Single-Phase 220/230 VAC
⑥	**T2**: Terminal Box Type Blank: Lead Wire Type	
⑦	Gear Ratio	Number: Gear Ratio of Combination Type
⑧	**A**: Imperial	

●Metric output shafts are available. See website for product names and drawings.

●World K Series 2-Pole/High-Speed Type

5 I K 60 A - BW 2 U

① ② ③ ④ ⑤ ⑥ ⑦ ⑧

①	Motor Frame Size	**4**: 80 mm (3.15 in.) **5**: 90 mm (3.54 in.)
②	Motor Type	**I**: Induction Motor
③	Series	**K**: **K** Series
④	Output Power (W)	(Example) **60**: 60 W (1/12 HP)
⑤	Motor Shaft Type	**A**: Round Shaft
⑥	Power Supply Voltage/ Number of Poles	**BW**: Single-Phase 110/115 VAC 2-Pole **DW**: Single-Phase 220/230 VAC 2-Pole
⑦	**2**, **3**: RoHS-Compliant	
⑧	Included Capacitor	**U**: For Single-Phase 110/115 VAC **E**: For Single-Phase 220/230 VAC

●The **U** and **E** at the end of the product name indicate that the unit includes a capacitor. These letters are not listed on the motor nameplate.
When the motor is approved under various standards, the product name on the nameplate is the approved product name.
(Example) Model: **5IK60A-BW2U** ➜ Motor nameplate and product approved under various standards: **5IK60A-BW2**

●BH Series

BH I 6 2 F T - 100 RH

① ② ③ ④ ⑤ ⑥ ⑦ ⑧

①	Series	**BH**: **BH** Series
②	Motor Type	**I**: Induction Motor
③	Motor Frame Size	**6**: 104 mm (4.09 in.)
④	Output Power (W)	(Example) **2**: 200 W (1/4 HP)
⑤	Power Supply Voltage	**F**: Single-Phase 110/115 VAC **E**: Single-Phase 220/230 VAC
⑥	**T**: Terminal Box Type Blank: Cable Type	
⑦	Gear Ratio, Motor Shaft Type	**A**: Round Shaft Type Number: Gear Ratio of Combination Type
⑧	Type of Gearhead (Combination type only)	**RH**: Right-Angle, Hollow Shaft Type **RA**: Right-Angle, Solid Shaft Type Blank: Parallel Shaft Type

General Specifications

●KⅡ Series

Item	Specifications
Insulation Resistance	100 MΩ or more when 500 VDC megger is applied between the windings and the case after rated operation under normal ambient temperature and humidity.
Dielectric Strength	Sufficient to withstand 1.5 kVAC at 60 Hz applied between the windings and the case for 1 minute after rated operation under normal ambient temperature and humidity.
Temperature Rise	Temperature rise of windings are 80°C (144°F) or less measured by the resistance change method after rated operation under normal ambient temperature and humidity.
Thermal Class	130 (B)
Overheat Protection	6 W (1/125 HP) type has impedance protection. Other Types Built-In thermal protector (automatic return type) Open: 130±5°C (266±9°F), Close: 85±20°C (185±36°F)
Ambient Temperature	−10～+40°C (+14～+104°F) (non-freezing)
Ambient Humidity	85% or less (non-condensing)
Degree of Protection	Terminal Box Type: 25 W (1/30 HP), 40 W (1/19 HP) IP66* (excluding the installation surface of the round shaft type) : 60 W (1/12 HP), 90 W (1/8 HP) IP54 (excluding the installation surface of the round shaft type) Lead Wire Type: IP20

*Refer to page C-115 for the materials and surface treatments.

●World K Series 2-Pole/High-Speed Type

Item	Specifications
Insulation Resistance	100 MΩ or more when 500 VDC megger is applied between the windings and the case after rated operation under normal ambient temperature and humidity.
Dielectric Strength	Sufficient to withstand 1.5 kVAC at 50 Hz or 60 Hz applied between the windings and the case for 1 minute after rated operation under normal ambient temperature and humidity.
Temperature Rise	Temperature rise of windings are 80°C (144°F) or less measured by the resistance change method after rated operation under normal ambient temperature and humidity with connecting a gearhead or equivalent heat radiation plate*.
Thermal Class	130 (B)
Overheat Protection	Built-In thermal protector (automatic return type) Open: 130±5°C (266±9°F), Close: 82±15°C (179.6±27°F)
Ambient Temperature	−10～+40°C (+14～+104°F) (non-freezing)
Ambient Humidity	85% or less (non-condensing)
Degree of Protection	IP20

*Heat radiation plate (Material: Aluminum)

Motor Type	Size: mm (in.)	Thickness: mm (in.)
2-Pole, High-Speed **4IK40** Type, **4IK60** Type	135×135 (5.31×5.31)	5 (0.20)
2-Pole, High-Speed **5IK60** Type	165×165 (6.50×6.50)	
2-Pole/High-Speed **5IK90** Type, **51K150** Type	200×200 (7.87×7.87)	

●BH Series

Item	Specifications
Insulation Resistance	100 MΩ or more when 500 VDC megger is applied between the windings and the case after rated operation under normal ambient temperature and humidity.
Dielectric Strength	Sufficient to withstand 1.5 kVAC at 50 Hz or 60 Hz applied between the windings and the case for 1 minute after rated operation under normal ambient temperature and humidity.
Temperature Rise	Temperature rise of windings are 70°C (126°F) or less measured by the resistance change method after rated operation under normal ambient temperature and humidity with connecting a gearhead or equivalent heat radiation plate*.
Thermal Class	130 (B)
Overheat Protection	Built-in thermal protector (automatic return type) Open: 150±5°C, (302±9°F), Close: 96±15°C (204.8±27°F)
Ambient Temperature	−10～+40°C (+14～+104°F) (non-freezing)
Ambient Humidity	85% or less (non-condensing)
Degree of Protection	Terminal Box Type: IP54 (excluding the installation surface of the round shaft type) Cable Type: IP40

*Heat radiation plate: 230×230 mm (9.06×9.06 in.), Thickness: 5 mm (0.20 in.) (Material: Aluminum)

KⅡ Series

6 W (1/125 HP)

Frame Size: □60 mm (□2.36 in.)

Specifications – Continuous Rating

Product Name Lead Wire Type	Output Power W (HP)	Voltage VAC	Frequency Hz	Current A	Starting Torque mN·m (oz-in.)	Rated Torque mN·m (oz-in.)	Rated Speed r/min	Capacitor μF	Overheat Protection Device
2IK6UA-□A	6 (1/125)	Single-Phase 110	60	0.185	40 (5.6)	41 (5.8)	1450	2.5	ZP
		Single-Phase 115		0.189	40 (5.6)	41 (5.8)	1450		
2IK6UC-□A	6 (1/125)	Single-Phase 220	60	0.093	40 (5.6)	41 (5.8)	1450	0.6	
		Single-Phase 230		0.096	40 (5.6)	41 (5.8)	1450		

● The values in the table are characteristics for the motor only.
ZP: These products are impedance protected.

Product Line

Combination Type

Motor and gearhead are delivered pre-assembled. The combination of motors and gearheads can be changed and they are also available separately.
In addition, the gearhead can be removed and the assembly position can be changed in 90° increments.

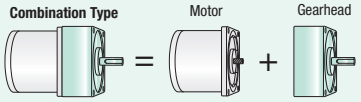

● Combination Type

Price includes motor and gearhead.

Product Name	Gear Ratio	List Price
2IK6UA-□A	**5, 6, 7.5, 9, 12.5, 15, 18**	$121.00
	25, 30, 36	$127.00
	50, 60, 75, 90, 100, 120, 150, 180	$134.00
	250, 300, 360	$180.00
2IK6UC-□A	**5, 6, 7.5, 9, 12.5, 15, 18**	$124.00
	25, 30, 36	$130.00
	50, 60, 75, 90, 100, 120, 150, 180	$137.00
	250, 300, 360	$183.00

The following items are included with each product.
Motor, Gearhead, Capacitor, Capacitor Cap, Installation Screws, Parallel Key, Operating Manual

● A number indicating the gear ratio is entered where the box □ is located within the product name.

Permissible Torque

● The speed is calculated by dividing the motor's synchronous speed (60 Hz: 1800 r/min) by the gear ratio.
The actual speed is 2~20% less, depending on the load.

Unit: Upper values: N·m/Lower values: lb-in.

Product Name	Speed r/min	360	300	240	200	144	120	100	72	60	50	36	30	24	20	18	15	12	10	7.2	6	5
	Gear Ratio	**5**	**6**	**7.5**	**9**	**12.5**	**15**	**18**	**25**	**30**	**36**	**50**	**60**	**75**	**90**	**100**	**120**	**150**	**180**	**250**	**300**	**360**
2IK6U■-□A		0.18	0.22	0.28	0.33	0.46	0.55	0.66	0.92	1.1	1.3	1.8	2.1	2.6	3.2	3.5	4.2	5.0	6	6	6	6
		1.59	1.94	2.4	2.9	4.0	4.8	5.8	8.1	9.7	11.5	15.9	18.5	23	28	30	37	44	53	53	53	53

Dimensions Unit = mm (in.)

● Installation screws are included. Dimensions for installation screws ➜ Page C-215

●Lead Wire Type

◇Combination Type

2D & 3D CAD

Product Name	Motor Product Name	Gearhead Product Name	Gear Ratio	L	Mass kg (lb.)	2D CAD
2IK6U■-□A	2IK6GV-U■	2GV□A	**5~25**	34 (1.34)	1.2 (2.6)	A1243A
			30~120	38 (1.50)		A1243B
			150~360	43 (1.69)		A1243C

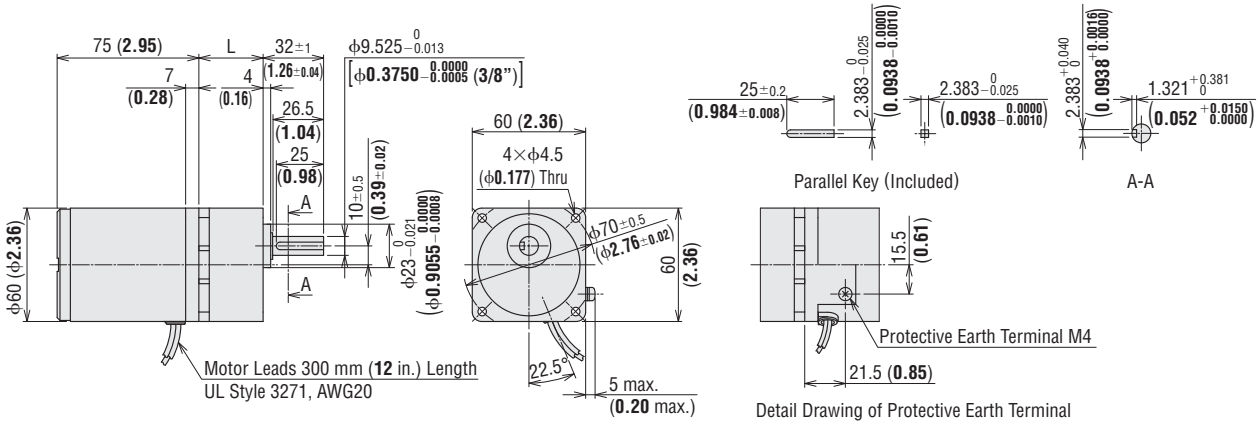

◇Capacitor (Included with single-phase motors)

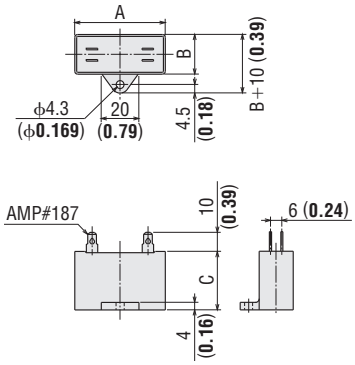

Unit: mm (in.)

Product Name / Combination Type	Capacitor Product Name	A	B	C	Mass g (oz.)
2IK6UA-□A	CH25FAUL2	31 (1.22)	17 (0.67)	27 (1.06)	21 (0.74)
2IK6UC-□A	CH06BFAUL	31 (1.22)	14.5 (0.57)	23.5 (0.93)	18 (0.64)

● A capacitor cap is included.

● Either **A** or **C** indicating the power supply voltage is entered where the box ■ is located within the product name.
A number indicating the gear ratio is entered where the box □ is located within the product name.

KⅡ Series

15 W (1/50 HP)

Frame Size: □70 mm (□2.76 in.)

6 W (1/125 HP)
15 W (1/50 HP)
25 W (1/30 HP)
40 W (1/19 HP)
60 W (1/12 HP)
90 W (1/8 HP)
BH Series 200 W (1/4 HP)
2-Pole High-Speed 40-150 W (1/19-1/5 HP)

Specifications – Continuous Rating

Product Name Lead Wire Type	Output Power W (HP)	Voltage VAC	Frequency Hz	Current A	Starting Torque mN·m (oz-in.)	Rated Torque mN·m (oz-in.)	Rated Speed r/min	Capacitor μF	Overheat Protection Device
3IK15UA-□A	15 (1/50)	Single-Phase 110	60	0.31	65 (9.2)	105 (14.9)	1450	4.0	TP
		Single-Phase 115		0.31	65 (9.2)	105 (14.9)	1450		
3IK15UC-□A	15 (1/50)	Single-Phase 220	60	0.154	65 (9.2)	105 (14.9)	1450	1.0	
		Single-Phase 230		0.155	65 (9.2)	105 (14.9)	1450		

● The values in the table are characteristics for the motor only.

TP: This indicates that there is a built-in thermal protector (automatic return type). If a motor overheats for any reason, the thermal protector is activated and the motor is stopped. When the motor temperature drops, the thermal protector closes and the motor restarts automatically. Be sure to turn the power supply off before inspecting.

Product Line

Combination Type

Motor and gearhead are delivered pre-assembled. The combination of motors and gearheads can be changed and they are also available separately.
In addition, the gearhead can be removed and the assembly position can be changed in 90° increments.

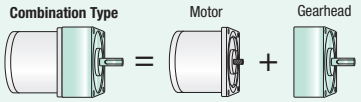

●Combination Type

Price includes motor and gearhead.

Product Name	Gear Ratio	List Price
3IK15UA-□A	**5, 6, 7.5, 9, 12.5, 15, 18**	$132.00
	25, 30, 36	$138.00
	50, 60, 75, 90, 100, 120, 150, 180	$145.00
	250, 300, 360	$189.00
3IK15UC-□A	**5, 6, 7.5, 9, 12.5, 15, 18**	$134.00
	25, 30, 36	$140.00
	50, 60, 75, 90, 100, 120, 150, 180	$147.00
	250, 300, 360	$191.00

The following items are included with each product.
Motor, Gearhead, Capacitor, Capacitor Cap, Installation Screws, Parallel Key, Operating Manual

● A number indicating the gear ratio is entered where the box □ is located within the product name.

Permissible Torque

● The speed is calculated by dividing the motor's synchronous speed (60 Hz: 1800 r/min) by the gear ratio.
The actual speed is 2~20% less, depending on the load.

Unit: Upper values: N·m/Lower values: lb-in.

Product Name	Speed r/min	360	300	240	200	144	120	100	72	60	50	36	30	24	20	18	15	12	10	7.2	6	5
	Gear Ratio	**5**	**6**	**7.5**	**9**	**12.5**	**15**	**18**	**25**	**30**	**36**	**50**	**60**	**75**	**90**	**100**	**120**	**150**	**180**	**250**	**300**	**360**
3IK15U■-□A		0.47	0.57	0.71	0.85	1.2	1.4	1.7	2.4	2.7	3.3	4.5	5.4	6.8	8.1	9.0	10	10	10	10	10	10
		4.1	5.0	6.2	7.5	10.6	12.3	15.0	21	23	29	39	47	60	71	79	88	88	88	88	88	88

Dimensions Unit = mm (in.)

● Installation screws are included. Dimensions for installation screws ➜Page C-215

●Lead Wire Type

◇Combination Type

2D & 3D CAD

Product Name	Motor Product Name	Gearhead Product Name	Gear Ratio	L	Mass kg (lb.)	2D CAD
3IK15U■-□A	3IK15GV-U■	3GV□A	**5~25**	38 (1.50)	1.7 (3.7)	A1244A
			30~120	43 (1.69)		A1244B
			150~360	48 (1.89)		A1244C

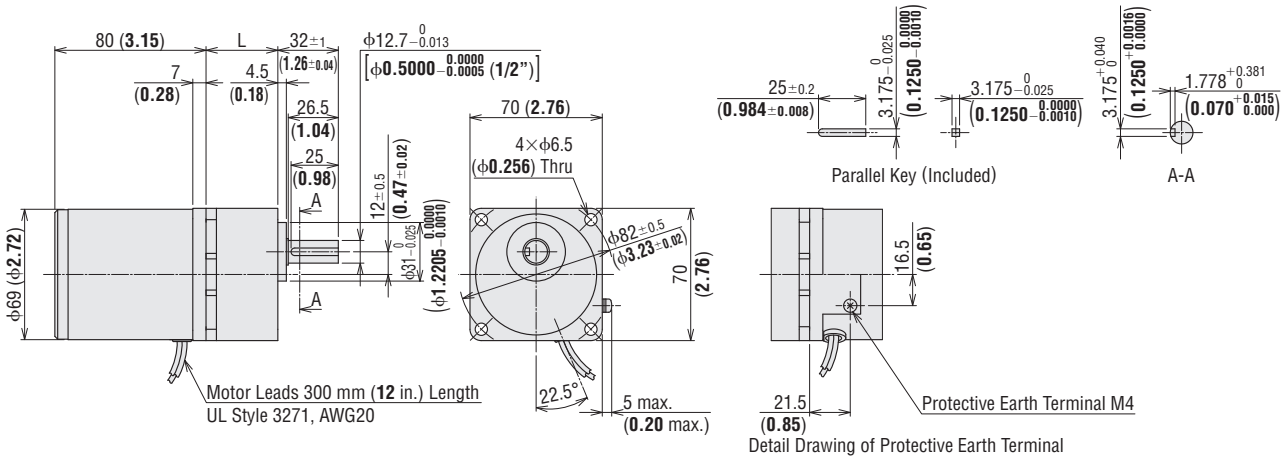

◇Capacitor (Included with single-phase motors)

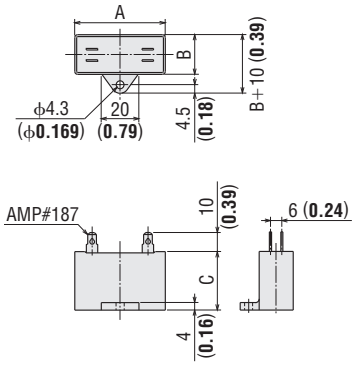

Unit: mm (in.)

Product Name / Combination Type	Capacitor Product Name	A	B	C	Mass g (oz.)
3IK15UA-□A	CH40FAUL2	37 (1.46)	18 (0.71)	27 (1.06)	26 (0.92)
3IK15UC-□A	CH10BFAUL	37 (1.46)	18 (0.71)	27 (1.06)	27 (0.95)

● A capacitor cap is included.

● Either **A** or **C** indicating the power supply voltage is entered where the box ■ is located within the product name.
A number indicating the gear ratio is entered where the box □ is located within the product name.

KⅡ Series

25 W (1/30 HP)

Frame Size: □80 mm (□3.15 in.)

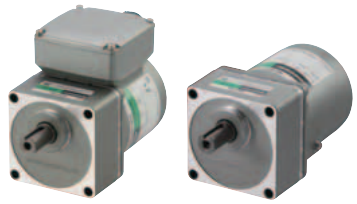

Terminal Box Type　　Lead Wire Type

Specifications – Continuous Rating

Product Name		Output Power	Voltage	Frequency	Current	Starting Torque	Rated Torque	Rated Speed	Capacitor	Overheat Protection Device
Terminal Box Type	Lead Wire Type	W (HP)	VAC	Hz	A	mN·m (oz-in.)	mN·m (oz-in.)	r/min	μF	
4IK25UAT2-□A	**4IK25UA-□A**	25 (1/30)	Single-Phase 110	60	0.44	120 (17.0)	170 (24)	1450	6.0	TP
			Single-Phase 115		0.43	120 (17.0)	170 (24)	1450		
4IK25UCT2-□A	**4IK25UC-□A**	25 (1/30)	Single-Phase 220	60	0.22	110 (15.6)	170 (24)	1450	1.5	
			Single-Phase 230		0.22	120 (17.0)	170 (24)	1450		

● The values in the table are characteristics for the motor only.

TP: This indicates that there is a built-in thermal protector (automatic return type). If a motor overheats for any reason, the thermal protector is activated and the motor is stopped. When the motor temperature drops, the thermal protector closes and the motor restarts automatically. Be sure to turn the power supply off before inspecting.

Product Line

Combination Type

Motor and gearhead are delivered pre-assembled. The combination of motors and gearheads can be changed and they are also available separately.
In addition, the gearhead can be removed and the assembly position can be changed in 90° increments.

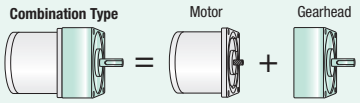

●Combination Type　Price includes motor and gearhead.

◇Terminal Box Type

Product Name	Gear Ratio	List Price
4IK25UAT2-□A	**5, 6, 7.5, 9, 12.5, 15, 18**	$162.00
	25, 30, 36	$168.00
	50, 60, 75, 90, 100, 120, 150, 180	$175.00
	250, 300, 360	$222.00
4IK25UCT2-□A	**5, 6, 7.5, 9, 12.5, 15, 18**	$165.00
	25, 30, 36	$171.00
	50, 60, 75, 90, 100, 120, 150, 180	$178.00
	250, 300, 360	$225.00

The following items are included with each product.
Motor, Gearhead, Capacitor, Capacitor Cap, Installation Screws, Parallel Key, Operating Manual

◇Lead Wire Type

Product Name	Gear Ratio	List Price
4IK25UA-□A	**5, 6, 7.5, 9, 12.5, 15, 18**	$140.00
	25, 30, 36	$146.00
	50, 60, 75, 90, 100, 120, 150, 180	$153.00
	250, 300, 360	$200.00
4IK25UC-□A	**5, 6, 7.5, 9, 12.5, 15, 18**	$144.00
	25, 30, 36	$150.00
	50, 60, 75, 90, 100, 120, 150, 180	$157.00
	250, 300, 360	$204.00

Permissible Torque

● The speed is calculated by dividing the motor's synchronous speed (60 Hz: 1800 r/min) by the gear ratio.
The actual speed is 2~20% less, depending on the load.

Unit: Upper values: N·m/Lower values: lb-in.

Product Name	Speed r/min	360	300	240	200	144	120	100	72	60	50	36	30	24	20	18	15	12	10	7.2	6	5
	Gear Ratio	**5**	**6**	**7.5**	**9**	**12.5**	**15**	**18**	**25**	**30**	**36**	**50**	**60**	**75**	**90**	**100**	**120**	**150**	**180**	**250**	**300**	**360**
4IK25U□□-□A		0.77	0.92	1.1	1.4	1.9	2.3	2.8	3.8	4.4	5.3	7.3	8.8	11.0	13.2	14.6	16	16	16	16	16	16
		6.8	8.1	9.7	12.3	16.8	20	24	33	38	46	64	77	97	116	129	141	141	141	141	141	141

● Either **A** or **C** indicating the power supply voltage is entered where the box ■ is located within the product name.
● A code (**T2**) indicating the terminal box type is entered where the box □ is located within the product name.
A number indicating the gear ratio is entered where the box □ is located within the product name.

Page
Features C-115 / System Configuration C-117 / Specifications C-119
Connection Diagrams C-132 / Motor and Gearhead Combinations C-133

Dimensions Unit = mm (in.)

- Installation screws are included. Dimensions for installation screws ➜ Page C-215
- The terminal box cable outlet can be rotated and affixed in 4 possible directions. Details about terminal boxes ➜ Page C-214

Terminal Box Type

◇Combination Type

2D & 3D CAD

Product Name	Motor Product Name	Gearhead Product Name	Gear Ratio	L1	L2	Mass kg (lb.)	2D CAD
4IK25U■T2-□A	4IK25GV-U■T2	4GV□A	**5～25**	32.6 (1.28)	41 (1.61)	2.75 (6.1)	A1389A
			30～120	37.6 (1.48)	46 (1.81)		A1389B
			150～360	42.6 (1.68)	51 (2.01)		A1389C

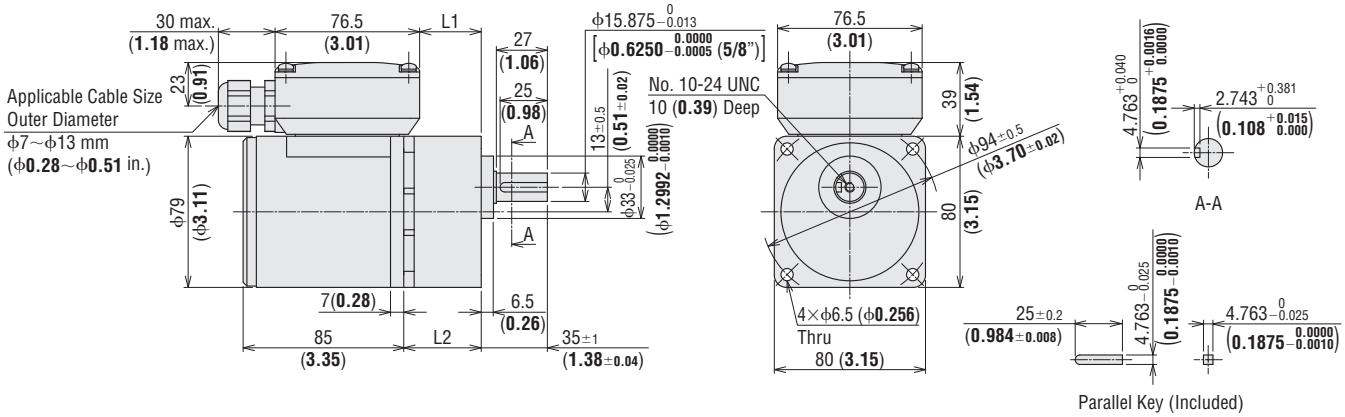

Lead Wire Type

◇Combination Type

2D & 3D CAD

Product Name	Motor Product Name	Gearhead Product Name	Gear Ratio	L	Mass kg (lb.)	2D CAD
4IK25U■-□A	4IK25GV-U■	4GV□A	**5～25**	41 (1.61)	2.45 (5.4)	A1245A
			30～120	46 (1.81)		A1245B
			150～360	51 (2.01)		A1245C

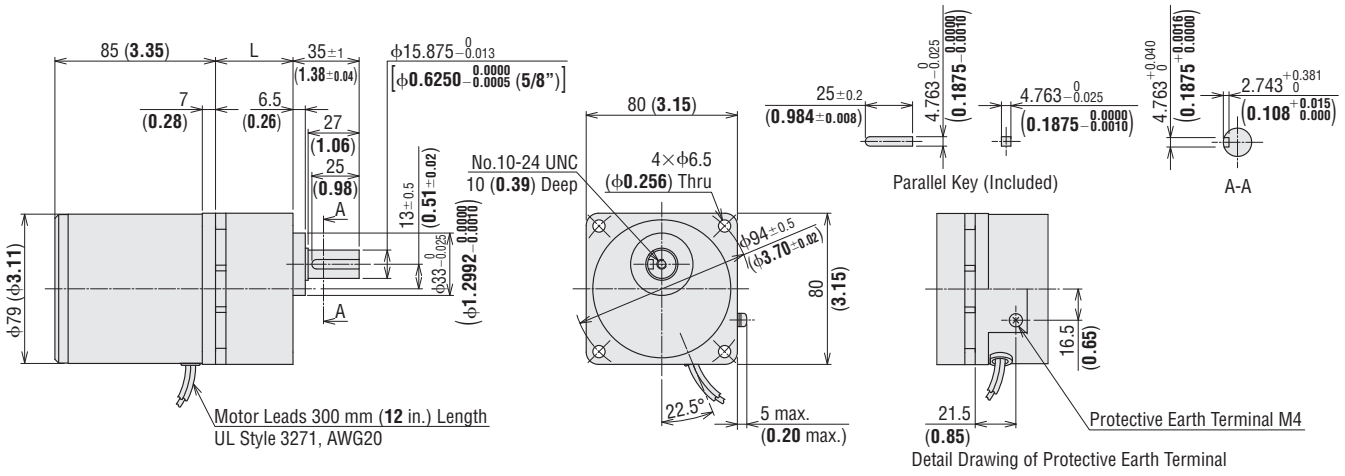

◇Capacitor (Included with single-phase motors)

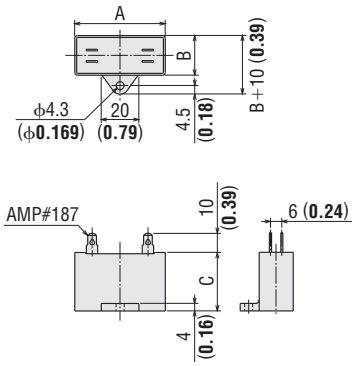

Unit: mm (in.)

Product Name		Capacitor Product Name	A	B	C	Mass g (oz.)
Terminal Box Type	Lead Wire Type					
4IK25UAT2-□A	**4IK25UA-□A**	CH60CFAUL2	38 (1.50)	21 (0.83)	31 (1.22)	35 (1.24)
4IK25UCT2-□A	**4IK25UC-□A**	CH15BFAUL	38 (1.50)	21 (0.83)	31 (1.22)	37 (1.31)

- A capacitor cap is included.

- Either **A** or **C** indicating the power supply voltage is entered where the box ■ is located within the product name.
  A number indicating the gear ratio is entered where the box □ is located within the product name.

KⅡ Series

40 W (1/19 HP)

Frame Size: □90 mm (□3.54 in.)

6 W (1/125 HP)
15 W (1/50 HP)
25 W (1/30 HP)
40 W (1/19 HP)
60 W (1/12 HP)
90 W (1/8 HP)
BH Series 200 W (1/4 HP)
2-Pole High-Speed 40-150 W (1/19-1/5 HP)

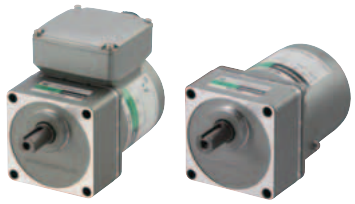

Terminal Box Type　　Lead Wire Type

Specifications – Continuous Rating

Product Name		Output Power	Voltage	Frequency	Current	Starting Torque	Rated Torque	Rated Speed	Capacitor	Overheat Protection Device
Terminal Box Type	Lead Wire Type	W (HP)	VAC	Hz	A	mN·m (oz-in.)	mN·m (oz-in.)	r/min	μF	
5IK40UAT2-□A	**5IK40UA-□A**	40 (1/19)	Single-Phase 110	60	0.66	200 (28)	260 (36)	1500	9.0	TP
			Single-Phase 115		0.65	200 (28)	260 (36)	1500		
5IK40UCT2-□A	**5IK40UC-□A**	40 (1/19)	Single-Phase 220	60	0.33	200 (28)	260 (36)	1500	2.0	
			Single-Phase 230		0.32	200 (28)	260 (36)	1500		

● The values in the table are characteristics for the motor only.

TP: This indicates that there is a built-in thermal protector (automatic return type). If a motor overheats for any reason, the thermal protector is activated and the motor is stopped. When the motor temperature drops, the thermal protector closes and the motor restarts automatically. Be sure to turn the power supply off before inspecting.

Product Line

Combination Type

Motor and gearhead are delivered pre-assembled. The combination of motors and gearheads can be changed and they are also available separately.
In addition, the gearhead can be removed and the assembly position can be changed in 90° increments.

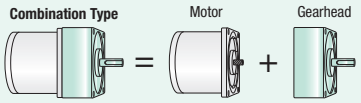

●Combination Type　Price includes motor and gearhead.

◇Terminal Box Type

Product Name	Gear Ratio	List Price
5IK40UAT2-□A	**5, 6, 7.5, 9, 12.5, 15, 18**	$191.00
	25, 30, 36	$198.00
	50, 60, 75, 90, 100, 120, 150, 180	$205.00
	250, 300	$283.00
5IK40UCT2-□A	**5, 6, 7.5, 9, 12.5, 15, 18**	$194.00
	25, 30, 36	$201.00
	50, 60, 75, 90, 100, 120, 150, 180	$208.00
	250, 300	$286.00

The following items are included with each product.
Motor, Gearhead, Capacitor, Capacitor Cap, Installation Screws, Parallel Key, Operating Manual

◇Lead Wire Type

Product Name	Gear Ratio	List Price
5IK40UA-□A	**5, 6, 7.5, 9, 12.5, 15, 18**	$169.00
	25, 30, 36	$176.00
	50, 60, 75, 90, 100, 120, 150, 180	$183.00
	250, 300	$261.00
5IK40UC-□A	**5, 6, 7.5, 9, 12.5, 15, 18**	$173.00
	25, 30, 36	$180.00
	50, 60, 75, 90, 100, 120, 150, 180	$187.00
	250, 300	$265.00

Permissible Torque

● The speed is calculated by dividing the motor's synchronous speed (60 Hz: 1800 r/min) by the gear ratio.
The actual speed is 2~20% less, depending on the load.

Unit: Upper values: N·m/Lower values: lb-in.

Product Name	Speed r/min	360	300	240	200	144	120	100	72	60	50	36	30	24	20	18	15	12	10	7.2	6
	Gear Ratio	**5**	**6**	**7.5**	**9**	**12.5**	**15**	**18**	**25**	**30**	**36**	**50**	**60**	**75**	**90**	**100**	**120**	**150**	**180**	**250**	**300**
5IK40U■□-□A		1.2	1.4	1.8	2.1	2.9	3.5	4.2	5.6	6.7	8.0	11.2	13.4	16.8	20.1	22.4	25.3	30	30	30	30
		10.6	12.3	15.9	18.5	25	30	37	49	59	70	99	118	148	177	198	220	260	260	260	260

● Either **A** or **C** indicating the power supply voltage is entered where the box ■ is located within the product name.
● A code (**T2**) indicating the terminal box type is entered where the box □ is located within the product name.
A number indicating the gear ratio is entered where the box □ is located within the product name.

Dimensions Unit = mm (in.)

- Installation screws are included. Dimensions for installation screws ➜ Page C-215
- The terminal box cable outlet can be rotated and affixed in 4 possible directions. Details about terminal boxes ➜ Page C-214

Terminal Box Type

◇Combination Type

2D & 3D CAD

Product Name	Motor Product Name	Gearhead Product Name	Gear Ratio	L1	L2	Mass kg (lb.)	2D CAD
5IK40U■T2-□A	5IK40GV-U■T2	5GV□A	**5~18**	36.6 (1.44)	45 (1.77)	4.3 (9.5)	A1390A
			25~100	49.6 (1.95)	58 (2.28)		A1390B
			120~300	55.6 (2.19)	64 (2.52)		A1390C

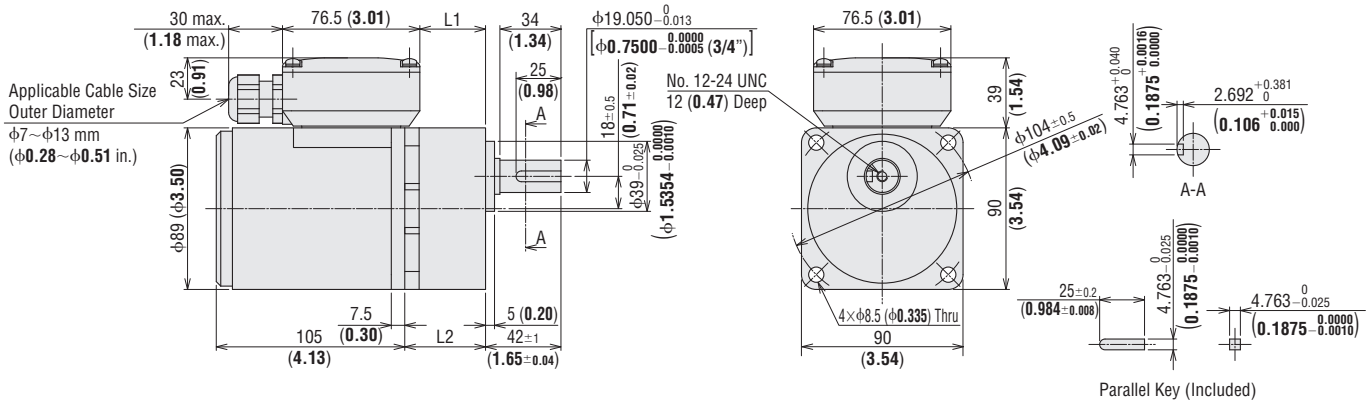

Lead Wire Type

◇Combination Type

2D & 3D CAD

Product Name	Motor Product Name	Gearhead Product Name	Gear Ratio	L	Mass kg (lb.)	2D CAD
5IK40U■-□A	5IK40GV-U■	5GV□A	**5~18**	45 (1.77)	4.0 (8.8)	A1247A
			25~100	58 (2.28)		A1247B
			120~300	64 (2.52)		A1247C

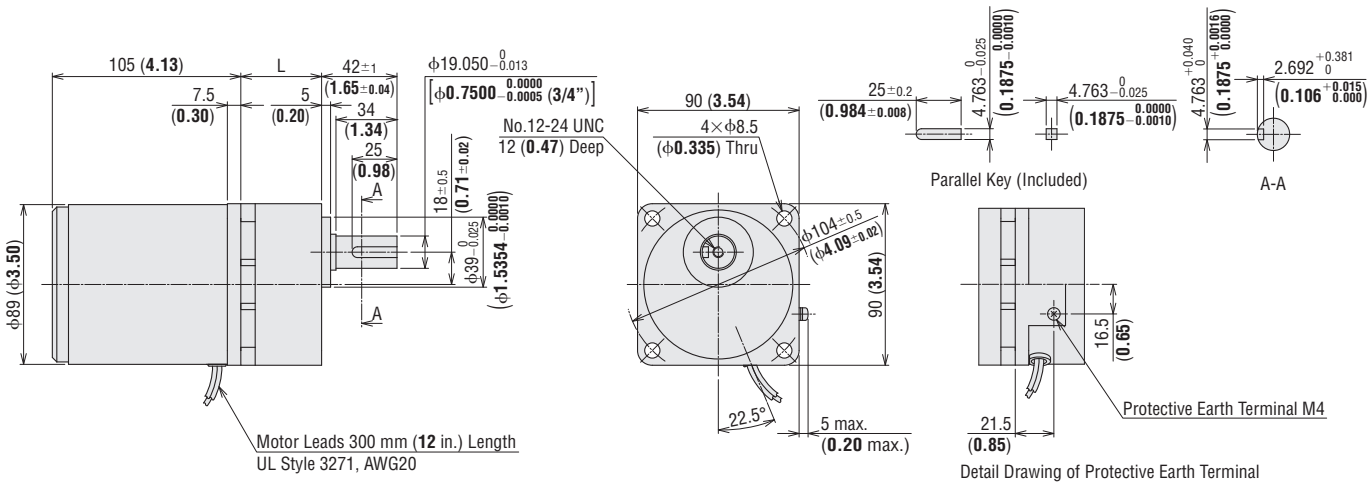

◇Capacitor (Included with single-phase motors)

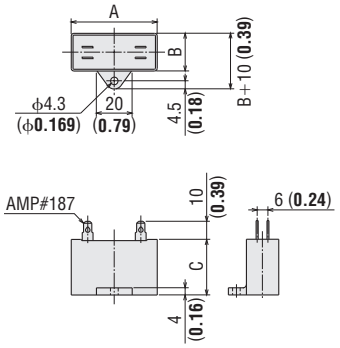

Unit: mm (in.)

Product Name		Capacitor Product Name	A	B	C	Mass g (oz.)
Terminal Box Type	Lead Wire Type					
5IK40UAT2-□A	**5IK40UA-□A**	CH90CFAUL2	48 (1.89)	22.5 (0.89)	31.5 (1.24)	45 (1.59)
5IK40UCT2-□A	**5IK40UC-□A**	CH20BFAUL	48 (1.89)	19 (0.75)	29 (1.14)	36 (1.27)

- A capacitor cap is included.

- Either **A** or **C** indicating the power supply voltage is entered where the box ■ is located within the product name.
  A number indicating the gear ratio is entered where the box □ is located within the product name.

6 W (1/125 HP)
15 W (1/50 HP)
25 W (1/30 HP)
40 W (1/19 HP)
60 W (1/12 HP)
90 W (1/8 HP)
BH Series 200 W (1/4 HP)
2-Pole High-Speed 40-150 W (1/19-1/5 HP)

KⅡ Series

60 W (1/12 HP)

Frame Size: □90 mm (□3.54 in.)

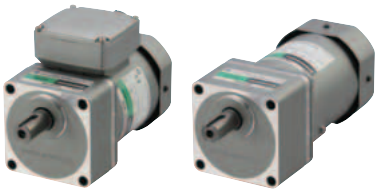

Terminal Box Type　　Lead Wire Type

Specifications – Continuous Rating

Product Name		Output Power	Voltage	Frequency	Current	Starting Torque	Rated Torque	Rated Speed	Capacitor	Overheat Protection Device
Terminal Box Type	Lead Wire Type	W (HP)	VAC	Hz	A	mN·m (oz-in.)	mN·m (oz-in.)	r/min	μF	
5IK60UAT2-□A	**5IK60UA-□A**	60 (1/12)	Single-Phase 110	60	1.09	320 (45)	405 (57)	1450	16	TP
			Single-Phase 115		1.09	320 (45)	405 (57)	1450		
5IK60UCT2-□A	**5IK60UC-□A**	60 (1/12)	Single-Phase 220	60	0.53	320 (45)	405 (57)	1450	4.0	
			Single-Phase 230		0.52	320 (45)	405 (57)	1450		

● The values in the table are characteristics for the motor only.

TP: This indicates that there is a built-in thermal protector (automatic return type). If a motor overheats for any reason, the thermal protector is activated and the motor is stopped. When the motor temperature drops, the thermal protector closes and the motor restarts automatically. Be sure to turn the power supply off before inspecting.

Product Line

Combination Type

Motor and gearhead are delivered pre-assembled. The combination of motors and gearheads can be changed and they are also available separately.
In addition, the gearhead can be removed and the assembly position can be changed in 90° increments.

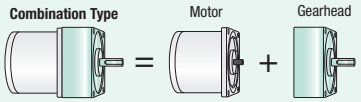

●Combination Type　Price includes motor and gearhead.

◇Terminal Box Type

Product Name	Gear Ratio	List Price
5IK60UAT2-□A	**5, 6, 7.5, 9, 12.5, 15, 18**	$245.00
	25, 30, 36, 50, 60, 75, 90, 100	$256.00
	120, 150, 180	$266.00
	250, 300	$300.00
5IK60UCT2-□A	**5, 6, 7.5, 9, 12.5, 15, 18**	$250.00
	25, 30, 36, 50, 60, 75, 90, 100	$261.00
	120, 150, 180	$271.00
	250, 300	$305.00

The following items are included with each product.
Motor, Gearhead, Capacitor, Capacitor Cap, Installation Screws, Parallel Key, Operating Manual

◇Lead Wire Type

Product Name	Gear Ratio	List Price
5IK60UA-□A	**5, 6, 7.5, 9, 12.5, 15, 18**	$224.00
	25, 30, 36, 50, 60, 75, 90, 100	$235.00
	120, 150, 180	$245.00
	250, 300	$279.00
5IK60UC-□A	**5, 6, 7.5, 9, 12.5, 15, 18**	$228.00
	25, 30, 36, 50, 60, 75, 90, 100	$239.00
	120, 150, 180	$249.00
	250, 300	$283.00

Permissible Torque

● The speed is calculated by dividing the motor's synchronous speed (60 Hz: 1800 r/min) by the gear ratio.
The actual speed is 2~20% less, depending on the load.

Unit: Upper values: N·m/Lower values: lb-in.

Product Name	Speed r/min	360	300	240	200	144	120	100	72	60	50	36	30	24	20	18	15	12	10	7.2	6
	Gear Ratio	**5**	**6**	**7.5**	**9**	**12.5**	**15**	**18**	**25**	**30**	**36**	**50**	**60**	**75**	**90**	**100**	**120**	**150**	**180**	**250**	**300**
5IK60U■□-□A		1.8	2.2	2.7	3.3	4.6	5.5	6.6	8.7	10.4	12.5	17.4	20.9	26.1	30	30	30	30	30	30	30
		15.9	19.4	23	29	40	48	58	76	92	110	153	184	230	260	260	260	260	260	260	260

● Either **A** or **C** indicating the power supply voltage is entered where the box ■ is located within the product name.
● A code (**T2**) indicating the terminal box type is entered where the box □ is located within the product name.
A number indicating the gear ratio is entered where the box □ is located within the product name.

Page
Features C-115 / System Configuration C-117 / Specifications C-119
Connection Diagrams C-132 / Motor and Gearhead Combinations C-133

Dimensions Unit = mm (in.)

- Installation screws are included. Dimensions for installation screws ➜ Page C-215
- The terminal box cable outlet can be rotated and affixed in 4 possible directions. Details about terminal boxes ➜ Page C-214

Terminal Box Type

◇Combination Type

2D & 3D CAD

Product Name	Motor Product Name	Gearhead Product Name	Gear Ratio	L1	L2	Mass kg (lb.)	2D CAD
5IK60U■T2-□A	5IK60GVH-U■T2	5GVH□A	**5～18**	36.6 (1.44)	45 (1.77)	4.5 (9.9)	A1391A
			25～100	49.6 (1.95)	58 (2.28)		A1391B
			120～300	55.6 (2.19)	64 (2.52)		A1391C

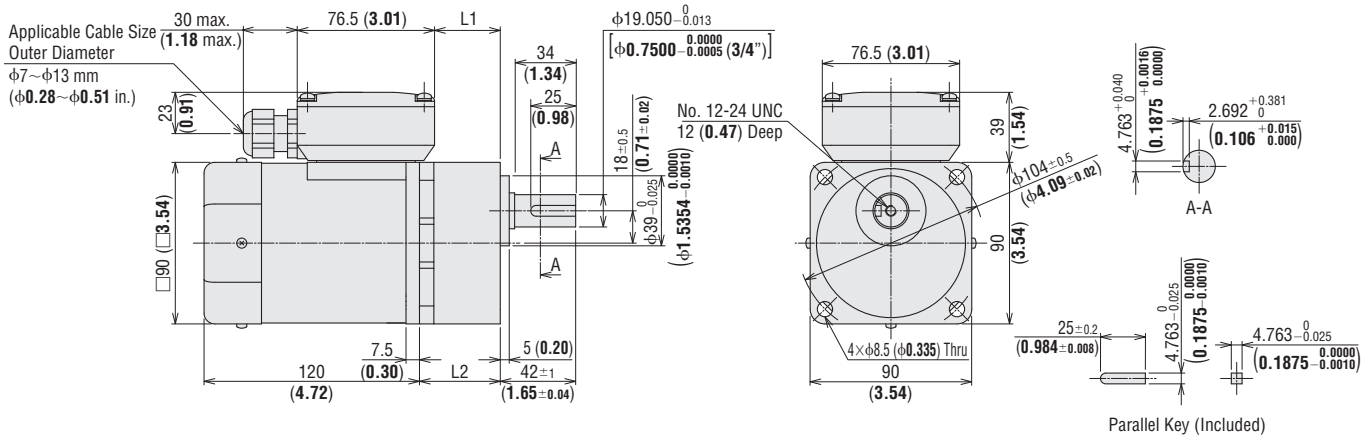

Lead Wire Type

◇Combination Type

2D & 3D CAD

Product Name	Motor Product Name	Gearhead Product Name	Gear Ratio	L	Mass kg (lb.)	2D CAD
5IK60U■-□A	5IK60GVH-U■	5GVH□A	**5～18**	45 (1.77)	4.2 (9.2)	A1249A
			25～100	58 (2.28)		A1249B
			120～300	64 (2.52)		A1249C

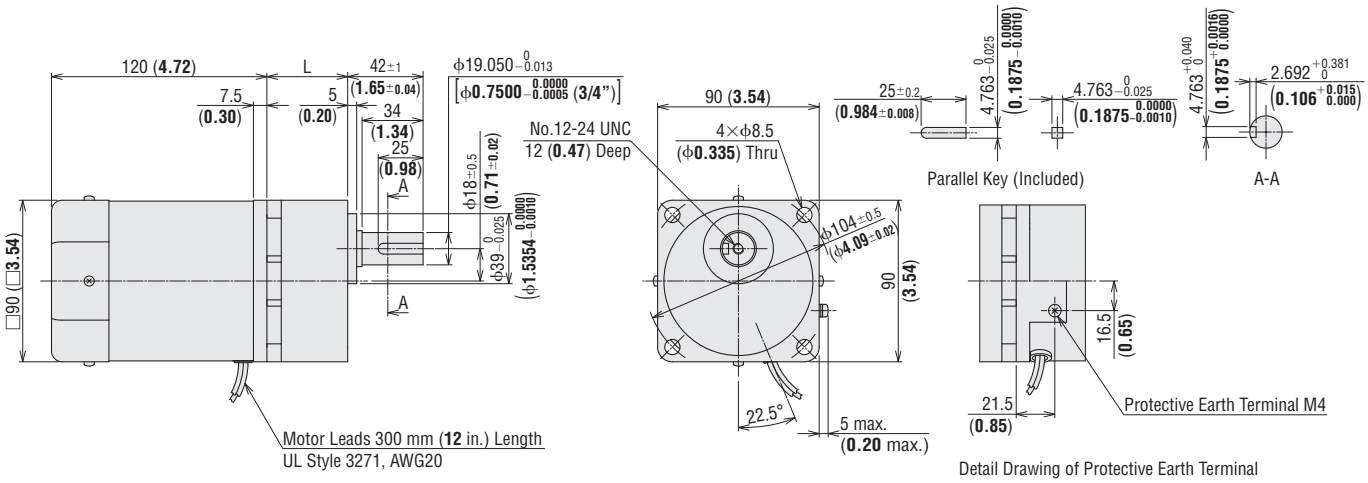

◇Capacitor (Included with single-phase motors)

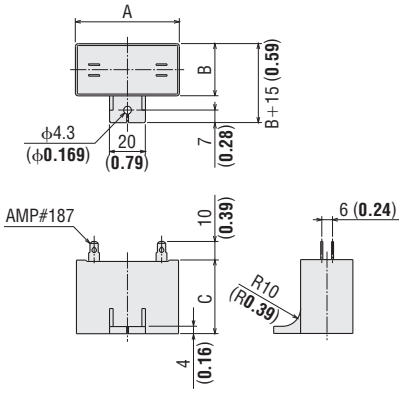

Unit: mm (in.)

Product Name: Terminal Box Type	Product Name: Lead Wire Type	Capacitor Product Name	A	B	C	Mass g (oz.)
5IK60UAT2-□A	**5IK60UA-□A**	CH160CFAUL2	58 (2.28)	23.5 (0.93)	37 (1.46)	71 (2.5)
5IK60UCT2-□A	**5IK60UC-□A**	CH40BFAUL	58 (2.28)	23.5 (0.93)	37 (1.46)	73 (2.6)

- A capacitor cap is included.

- Either **A** or **C** indicating the power supply voltage is entered where the box ■ is located within the product name.
  A number indicating the gear ratio is entered where the box □ is located within the product name.

KⅡ Series
90 W (1/8 HP)
Frame Size: □90 mm (□3.54 in.)

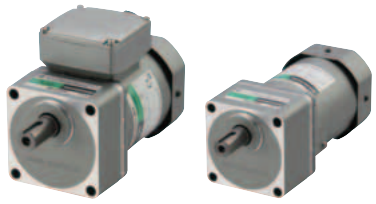

Terminal Box Type　　Lead Wire Type

Specifications – Continuous Rating

Product Name		Output Power	Voltage	Frequency	Current	Starting Torque	Rated Torque	Rated Speed	Capacitor	Overheat Protection Device
Terminal Box Type	Lead Wire Type	W (HP)	VAC	Hz	A	mN·m (oz-in.)	mN·m (oz-in.)	r/min	μF	
5IK90UAT2-□A	**5IK90UA-□A**	90 (1/8)	Single-Phase 110	60	1.44	450 (63)	585 (83)	1500	20	TP
			Single-Phase 115		1.44	450 (63)	585 (83)	1500		
5IK90UCT2-□A	**5IK90UC-□A**	90 (1/8)	Single-Phase 220	60	0.71	450 (63)	605 (85)	1450	5.0	
			Single-Phase 230		0.71	450 (63)	605 (85)	1450		

● The values in the table are characteristics for the motor only.
TP: This indicates that there is a built-in thermal protector (automatic return type). If a motor overheats for any reason, the thermal protector is activated and the motor is stopped. When the motor temperature drops, the thermal protector closes and the motor restarts automatically. Be sure to turn the power supply off before inspecting.

Product Line

Combination Type

Motor and gearhead are delivered pre-assembled. The combination of motors and gearheads can be changed and they are also available separately.
In addition, the gearhead can be removed and the assembly position can be changed in 90° increments.

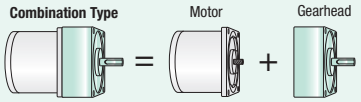

●Combination Type　Price includes motor and gearhead.

◇Terminal Box Type

Product Name	Gear Ratio	List Price
5IK90UAT2-□A	**5, 6, 7.5, 9, 12.5, 15, 18**	$265.00
	25, 30, 36, 50, 60,	$285.00
	75, 90, 100, 120, 150, 180	$295.00
5IK90UCT2-□A	**5, 6, 7.5, 9, 12.5, 15, 18**	$269.00
	25, 30, 36, 50, 60,	$289.00
	75, 90, 100, 120, 150, 180	$299.00

The following items are included with each product.
Motor, Gearhead, Capacitor, Capacitor Cap, Installation Screws, Parallel Key, Operating Manual

◇Lead Wire Type

Product Name	Gear Ratio	List Price
5IK90UA-□A	**5, 6, 7.5, 9, 12.5, 15, 18**	$243.00
	25, 30, 36, 50, 60,	$263.00
	75, 90, 100, 120, 150, 180	$273.00
5IK90UC-□A	**5, 6, 7.5, 9, 12.5, 15, 18**	$248.00
	25, 30, 36, 50, 60,	$268.00
	75, 90, 100, 120, 150, 180	$278.00

Permissible Torque

● The speed is calculated by dividing the motor's synchronous speed (60 Hz: 1800 r/min) by the gear ratio.
The actual speed is 2~20% less, depending on the load.

Unit: Upper values: N·m/Lower values: lb-in.

Product Name	Speed r/min	360	300	240	200	144	120	100	72	60	50	36	30	24	20	18	15	12	10
	Gear Ratio	**5**	**6**	**7.5**	**9**	**12.5**	**15**	**18**	**25**	**30**	**36**	**50**	**60**	**75**	**90**	**100**	**120**	**150**	**180**
5IK90UA□-□A		2.6	3.2	3.9	4.7	6.6	7.9	9.1	12.6	15.1	18.1	25.2	30.2	35.5	40	40	40	40	40
		23	28	34	41	58	69	80	111	133	160	220	260	310	350	350	350	350	350
5IK90UC□-□A		2.7	3.3	4.1	4.9	6.8	8.2	9.4	13.0	15.6	18.7	26.0	31.2	36.8	40	40	40	40	40
		23	29	36	43	60	72	83	115	138	165	230	270	320	350	350	350	350	350

● A code (**T2**) indicating the terminal box type is entered where the box □ is located within the product name.
A number indicating the gear ratio is entered where the box □ is located within the product name.

Page
Features C-115 / System Configuration C-117 / Specifications C-119
Connection Diagrams C-132 / Motor and Gearhead Combinations C-133

Dimensions Unit = mm (in.)

- Installation screws are included. Dimensions for installation screws ➜ Page C-215
- The terminal box cable outlet can be rotated and affixed in 4 possible directions. Details about terminal boxes ➜ Page C-214

Terminal Box Type

◇Combination Type

2D & 3D CAD

Product Name	Motor Product Name	Gearhead Product Name	Gear Ratio	L1	L2	Mass kg (lb.)	2D CAD
5IK90U■T2-□A	5IK90GVR-U■T2	5GVR□A	**5～15**	36.6 (1.44)	45 (1.77)	5.0 (11.0)	A1392A
			18～36	49.6 (1.95)	58 (2.28)		A1392B
			50～180	61.6 (2.43)	70 (2.76)		A1392C

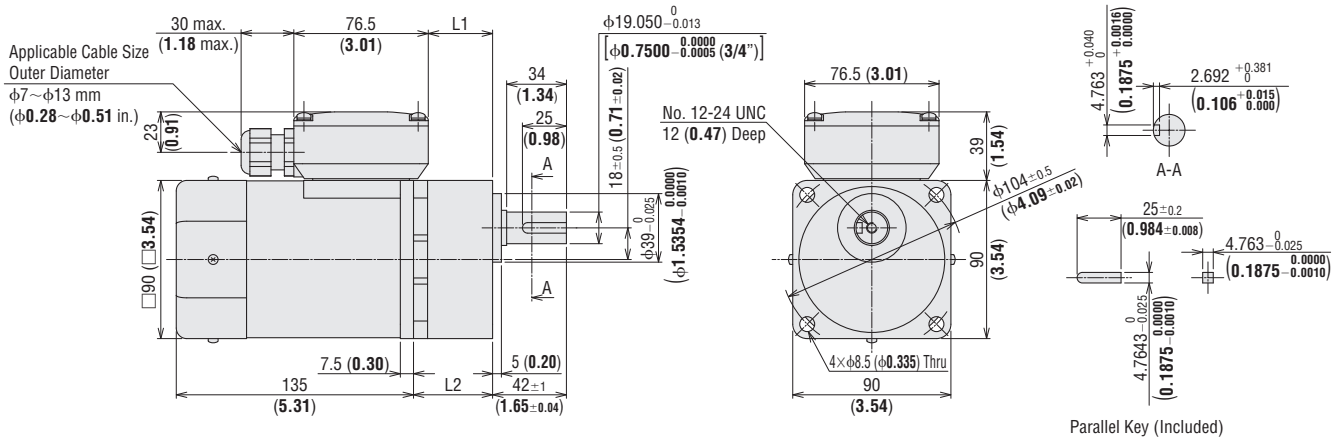

Lead Wire Type

◇Combination Type

2D & 3D CAD

Product Name	Motor Product Name	Gearhead Product Name	Gear Ratio	L	Mass kg (lb.)	2D CAD
5IK90U■-□A	5IK90GVR-U■	5GVR□A	**5～15**	45 (1.77)	4.7 (10.3)	A1251A
			18～36	58 (2.28)		A1251B
			50～180	70 (2.76)		A1251C

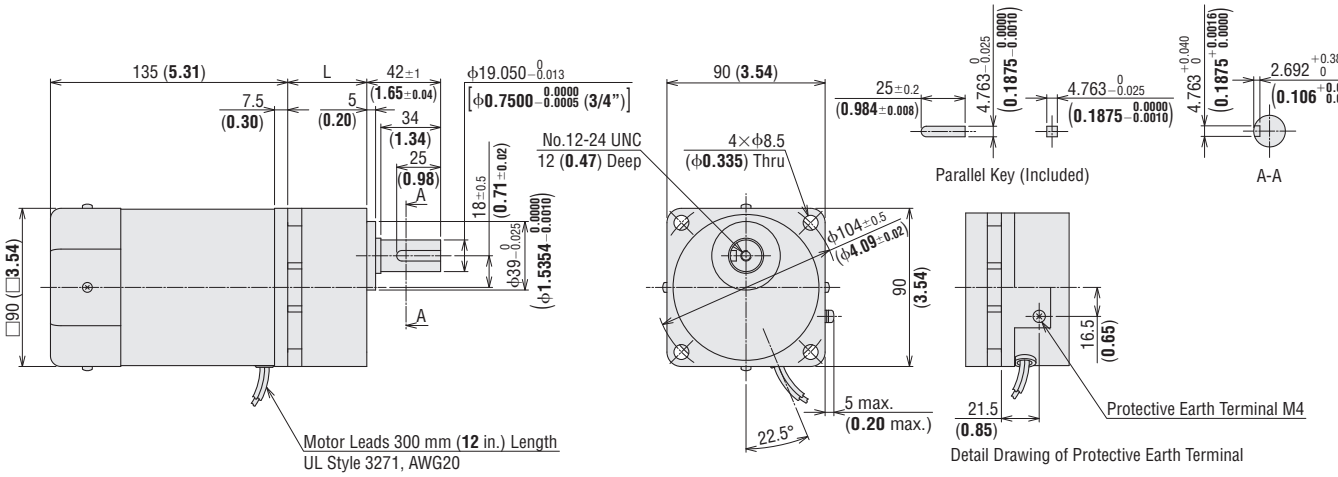

◇Capacitor (Included with single-phase motors)

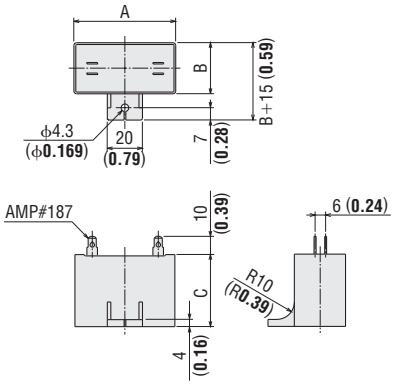

Unit: mm (in.)

Product Name		Capacitor Product Name	A	B	C	Mass g (oz.)
Terminal Box Type	Lead Wire Type					
5IK90UAT2-□A	**5IK90UA-□A**	CH200CFAUL2	58 (2.28)	29 (1.14)	41 (1.61)	91 (3.2)
5IK90UCT2-□A	**5IK90UC-□A**	CH50BFAUL	58 (2.28)	29 (1.14)	41 (1.61)	93 (3.3)

- A capacitor cap is included.

- Either **A** or **C** indicating the power supply voltage is entered where the box ■ is located within the product name.
  A number indicating the gear ratio is entered where the box □ is located within the product name.

Connection Diagrams

Parallel Shaft Combination Type

◇CW Rotation

Output Power	Gear Ratio	
6 W (1/125 HP) 15 W (1/50 HP) 25 W (1/30 HP)	Gear Ratio: **5**~**25**, **150**~**360**	Gear Ratio: **30**~**120**
40 W (1/19 HP) 60 W (1/12 HP)	Gear Ratio: **5**~**18**, **120**~**300**	Gear Ratio: **25**~**100**
90 W (1/8 HP)	Gear Ratio: **5**~**15**, **75**~**180**	Gear Ratio: **18**~**60**
Rotation Direction	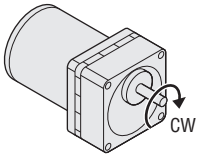	
Single-Phase Motor		
Terminal Box Type	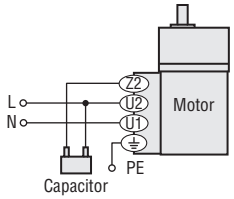	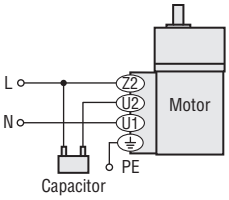
Lead Wire Type	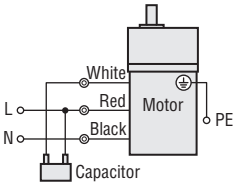	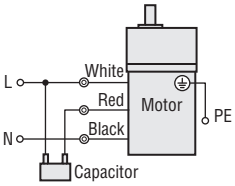

◇CCW Rotation

Output Power	Gear Ratio	
6 W (1/125 HP) 15 W (1/50 HP) 25 W (1/30 HP)	Gear Ratio: **5**~**25**, **150**~**360**	Gear Ratio: **30**~**120**
40 W (1/19 HP) 60 W (1/12 HP)	Gear Ratio: **5**~**18**, **120**~**300**	Gear Ratio: **25**~**100**
90 W (1/8 HP)	Gear Ratio: **5**~**15**, **75**~**180**	Gear Ratio: **18**~**60**
Rotation Direction	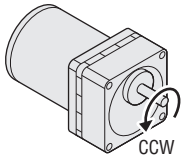	
Single-Phase Motor		
Terminal Box Type	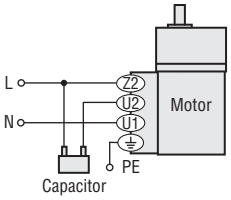	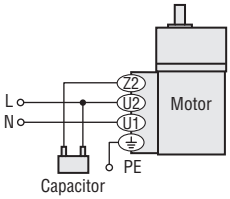
Lead Wire Type	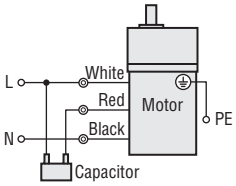	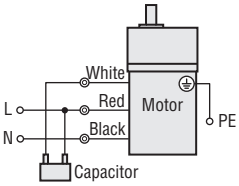

Note

- Change the direction of single-phase motor rotation only after bringing the motor to a stop.
  If an attempt is made to change the direction of rotation while the motor is rotating, the motor may ignore the reversing command or change its direction of rotation after some delay.

How to Connect a Capacitor

The capacitor has 4 terminals: terminal A is connected internally to terminal B, and terminal C is connected internally to terminal D, as shown in the illustration. Electrically, this creates 2 terminals.

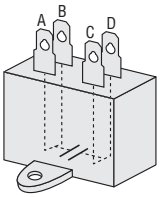

Inner Wiring Diagram for 4-Terminal Capacitor

•Connecting method of capacitor and motor

(For induction motor/clockwise rotation)

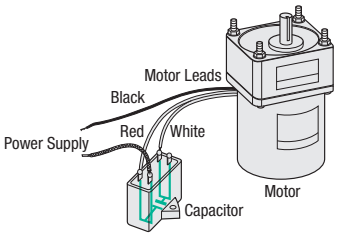

List of Motor and Gearhead Combinations

Terminal Box Type

Type	Product Name	Motor Product Name	Gearhead Product Name
Terminal Box Type	**4IK25UAT2-□A**	4IK25GV-UAT2	4GV□A
	4IK25UCT2-□A	4IK25GV-UCT2	
	5IK40UAT2-□A	5IK40GV-UAT2	5GV□A
	5IK40UCT2-□A	5IK40GV-UCT2	
	5IK60UAT2-□A	5IK60GVH-UAT2	5GVH□A
	5IK60UCT2-□A	5IK60GVH-UCT2	
	5IK90UAT2-□A	5IK90GVR-UAT2	5GVR□A
	5IK90UCT2-□A	5IK90GVR-UCT2	

Lead Wire Type

Type	Product Name	Motor Product Name	Gearhead Product Name
Lead Wire Type	**2IK6UA-□A**	2IK6GV-UA	2GV□A
	2IK6UC-□A	2IK6GV-UC	
	3IK15UA-□A	3IK15GV-UA	3GV□A
	3IK15UC-□A	3IK15GV-UC	
	4IK25UA-□A	4IK25GV-UA	4GV□A
	4IK25UC-□A	4IK25GV-UC	
	5IK40UA-□A	5IK40GV-UA	5GV□A
	5IK40UC-□A	5IK40GV-UC	
	5IK60UA-□A	5IK60GVH-UA	5GVH□A
	5IK60UC-□A	5IK60GVH-UC	
	5IK90UA-□A	5IK90GVR-UA	5GVR□A
	5IK90UC-□A	5IK90GVR-UC	

● A number indicating the gear ratio is entered where the box □ is located within the product name.

High Power Induction Motors BH Series

200 W (1/4 HP)

Frame Size: □104 mm (□4.09 in.)

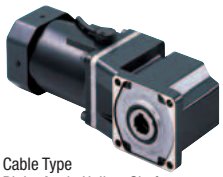

Cable Type
Right-Angle Hollow Shaft

Terminal Box Type
Parallel Shaft

Features

●High Power 200 W (1/4 HP)

Smallest frame size among 200 W (1/4 HP) motors

●Hypoid Gear Right-Angle Gearheads

Right-angle gearheads employ hypoid gears. Hollow shafts and solid shafts are available to enable space-saving.

●Tapped Hole at the Shaft End

The gearhead shafts feature a tapped hole for convenient connection with loads.

●"Combination Type" for Easy Installation

The combination type comes with the motor and gearhead pre-assembled. This enables easy installation in equipment.

Specifications – Continuous Rating

Product Name Combination Type ( ) : Round Shaft Type		Output Power W HP	Voltage VAC	Frequency Hz	Current A	Starting Torque N·m oz-in	Rated Torque N·m oz-in	Rated Speed r/min	Capacitor µF	Overheat Protection Device
Terminal Box Type	Cable Type									
BHI62FT-□RH **BHI62FT-□RA** **BHI62FT-□** (**BHI62FT-A**)	**BHI62F-□RH** **BHI62F-□RA** **BHI62F-□** (**BHI62F-A**)	200 1/4	Single-Phase 110	60	3	0.88 124	1.27 180	1500	40	TP
			Single-Phase 115			0.98 139				
BHI62ET-□RH **BHI62ET-□RA** **BHI62ET-□** (**BHI62ET-A**)	**BHI62E-□RH** **BHI62E-□RA** **BHI62E-□** (**BHI62E-A**)	200 1/4	Single-Phase 220	50	1.5	0.98 139	1.52 210	1250	10	TP
				60			1.27 180	1500		
			Single-Phase 230	50			1.52 210	1250		
				60			1.27 180	1500		

● A number indicating the gear ratio is entered where the box □ is located within the product name. The values for each specification applies to the motor only.
● For detailed information about regulations and standards, please see the Oriental Motor website.
TP: Contains a built-in thermal protector (automatic return type). If a motor overheats for any reason, the thermal protector is activated and the motor is stopped. When the motor temperature drops, the thermal protector closes and the motor restarts. Be sure to turn the motor power off before inspecting.

Product Line

Combination Type	Motor and gearhead are delivered pre-assembled. The combination of motors and gearheads can be changed and they are also available separately. In addition, the gearhead can be removed and the assembly position can be changed in 90° increments.

●Combination Type

◇Right-Angle Shaft

Type	Voltage	Product Name	Gear Ratio	List Price
Hollow Shaft Terminal Box	Single-Phase 110/115 VAC	**BHI62FT-□RH**	**5, 6, 7.5, 9, 12.5, 15, 18, 25, 30, 36**	$426.00
			50, 60, 75, 90, 100, 120, 150, 180	$446.00
	Single-Phase 220/230 VAC	**BHI62ET-□RH**	**5, 6, 7.5, 9, 12.5, 15, 18, 25, 30, 36**	$433.00
			50, 60, 75, 90, 100, 120, 150, 180	$453.00
Hollow Shaft Cable	Single-Phase 110/115 VAC	**BHI62F-□RH**	**5, 6, 7.5, 9, 12.5, 15, 18, 25, 30, 36**	$396.00
			50, 60, 75, 90, 100, 120, 150, 180	$416.00
	Single-Phase 220/230 VAC	**BHI62E-□RH**	**5, 6, 7.5, 9, 12.5, 15, 18, 25, 30, 36**	$403.00
			50, 60, 75, 90, 100, 120, 150, 180	$423.00
Solid Shaft Terminal Box	Single-Phase 110/115 VAC	**BHI62FT-□RA**	**5, 6, 7.5, 9, 12.5, 15, 18, 25, 30, 36**	$420.00
			50, 60, 75, 90, 100, 120, 150, 180	$440.00
	Single-Phase 220/230 VAC	**BHI62ET-□RA**	**5, 6, 7.5, 9, 12.5, 15, 18, 25, 30, 36**	$427.00
			50, 60, 75, 90, 100, 120, 150, 180	$447.00
Solid Shaft Cable	Single-Phase 110/115 VAC	**BHI62F-□RA**	**5, 6, 7.5, 9, 12.5, 15, 18, 25, 30, 36**	$390.00
			50, 60, 75, 90, 100, 120, 150, 180	$410.00
	Single-Phase 220/230 VAC	**BHI62E-□RA**	**5, 6, 7.5, 9, 12.5, 15, 18, 25, 30, 36**	$397.00
			50, 60, 75, 90, 100, 120, 150, 180	$417.00

The following items are included with each product.
Motor, Gearhead, Capacitor, Capacitor Cap, Parallel Key, Operating Manual

● A number indicating the gear ratio is entered where the box □ is located within the product name.

Page
Features C-114 / Specifications C-119 / Connection Diagrams C-140
Motor and Gearhead Combinations C-141

◇Parallel Shaft

Type	Voltage	Product Name	Gear Ratio	List Price
Parallel Shaft Terminal Box	Single-Phase 110/115 VAC	**BHI62FT-□**	**3, 3.6, 5, 6, 7.5, 9**	$364.00
			12.5, 15, 18, 25, 30, 36	$374.00
			50, 60, 75, 90, 100, 120, 150, 180	$383.00
	Single-Phase 220/230 VAC	**BHI62ET-□**	**3, 3.6, 5, 6, 7.5, 9**	$371.00
			12.5, 15, 18, 25, 30, 36	$381.00
			50, 60, 75, 90, 100, 120, 150, 180	$391.00
Parallel Shaft Cable	Single-Phase 110/115 VAC	**BHI62F-□**	**3, 3.6, 5, 6, 7.5, 9**	$334.00
			12.5, 15, 18, 25, 30, 36	$344.00
			50, 60, 75, 90, 100, 120, 150, 180	$354.00
	Single-Phase 220/230 VAC	**BHI62E-□**	**3, 3.6, 5, 6, 7.5, 9**	$342.00
			12.5, 15, 18, 25, 30, 36	$351.00
			50, 60, 75, 90, 100, 120, 150, 180	$361.00

● A number indicating the gear ratio is entered where the box □ is located within the product name.

The following items are included with each product.
Motor, Gearhead, Capacitor, Capacitor Cap, Installation Screws, Parallel Key, Operating Manual

●Round Shaft Type

Type	Voltage	Product Name	List Price
Terminal Box	Single-Phase 110/115 VAC	**BHI62FT-A**	$214.00
	Single-Phase 220/230 VAC	**BHI62ET-A**	$221.00
Cable	Single-Phase 110/115 VAC	**BHI62F-A**	$184.00
	Single-Phase 220/230 VAC	**BHI62E-A**	$191.00

The following items are included with each product.
Motor, Capacitor, Capacitor Cap, Operating Manual

Gearmotor – Torque Table for Combination Type

- Enter the code that represents the terminal box type "**T**" in the box ▢ within the product name.
- A number indicating the gear ratio is entered where the box □ is located within the product name.
- The speed is calculated by dividing the motor's synchronous speed (50 Hz: 1500 r/min, 60 Hz: 1800 r/min) by the gear ratio. The actual speed is 2~20% less than the displayed value, depending on the load.
- Decimal gearheads are not available for the **BH** series.

●Right-Angle Shaft 50 Hz

Unit: Upper values: N·m/Lower values: lb-in

Product Name	Speed r/min	300	250	200	167	120	100	83	60	50	42	30	25	20	17	15	12.5	10	8.3
	Gear Ratio	**5**	**6**	**7.5**	**9**	**12.5**	**15**	**18**	**25**	**30**	**36**	**50**	**60**	**75**	**90**	**100**	**120**	**150**	**180**
BHI62E▢-□RH, BHI62E▢-□RA		5.5 48	6.7 59	8.3 73	10.0 88	13.9 123	16.6 146	20.0 177	27.7 240	33.3 290	36.0 310	40.0 350	43.0 380	47.0 410	51.5 450	54.5 480	60 530	60 530	60 530

●Right-Angle Shaft 60 Hz

Unit: Upper values: N·m/Lower values: lb-in

Product Name	Speed r/min	360	300	240	200	144	120	100	72	60	50	36	30	24	20	18	15	12	10
	Gear Ratio	**5**	**6**	**7.5**	**9**	**12.5**	**15**	**18**	**25**	**30**	**36**	**50**	**60**	**75**	**90**	**100**	**120**	**150**	**180**
BHI62F▢-□RH, BHI62F▢-□RA **BHI62E▢-□RH, BHI62E▢-□RA**		4.6 40	5.6 49	7.0 61	8.3 73	11.6 102	13.9 123	16.7 147	23.2 200	27.8 240	33.4 290	40.0 350	43.0 380	47.0 410	51.5 450	54.5 480	60 530	60 530	60 530

●Parallel Shaft 50 Hz

Unit: Upper values: N·m/Lower values: lb-in

Product Name	Speed r/min	500	417	300	250	200	167	120	100	83	60	50	42	30	25	20	17	15	12.5	10	8.3
	Gear Ratio	**3**	**3.6**	**5**	**6**	**7.5**	**9**	**12.5**	**15**	**18**	**25**	**30**	**36**	**50**	**60**	**75**	**90**	**100**	**120**	**150**	**180**
BHI62E▢-□		4.1 36	4.9 43	6.8 60	8.2 72	10.3 91	12.3 108	16.3 144	19.6 173	23.5 200	32.7 280	39.2 340	40 350	40 350	40 350	40 350	40 350	40 350	40 350	40 350	40 350

●Parallel Shaft 60 Hz

Unit: Upper values: N·m/Lower values: lb-in

Product Name	Speed r/min	600	500	360	300	240	200	144	120	100	72	60	50	36	30	24	20	18	15	12	10
	Gear Ratio	**3**	**3.6**	**5**	**6**	**7.5**	**9**	**12.5**	**15**	**18**	**25**	**30**	**36**	**50**	**60**	**75**	**90**	**100**	**120**	**150**	**180**
BHI62F▢-□, BHI62E▢-□		3.4 30	4.1 36	5.7 50	6.9 61	8.6 76	10.3 91	13.7 121	16.4 145	19.7 174	27.3 240	32.8 290	39.3 340	40 350	40 350	40 350	40 350	40 350	40 350	40 350	40 350

Permissible Radial Load and Permissible Axial

Combination Type ➜ Page C-17
Round Shaft Type ➜ Page C-17

Permissible Inertia J of Gearhead

➜ Page C-18

Dimensions Unit = mm (in.)

● Installation screws are included with the combination type, parallel shaft. Dimensions for installation screws ➜ Page C-215

◇Combination Type: Right-Angle, Hollow Shaft (Terminal Box Type)

BHI62FT-□RH, **BHI62ET-□RH**

Mass: 10.0 kg (22 lb.)

Motor: BHI62FT-G2, BHI62ET-G2

Gearhead: BH6G2-□RH

2D CAD A301

3D CAD

◇Key (Included)

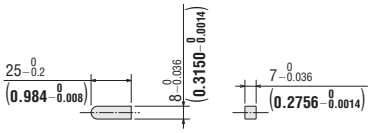

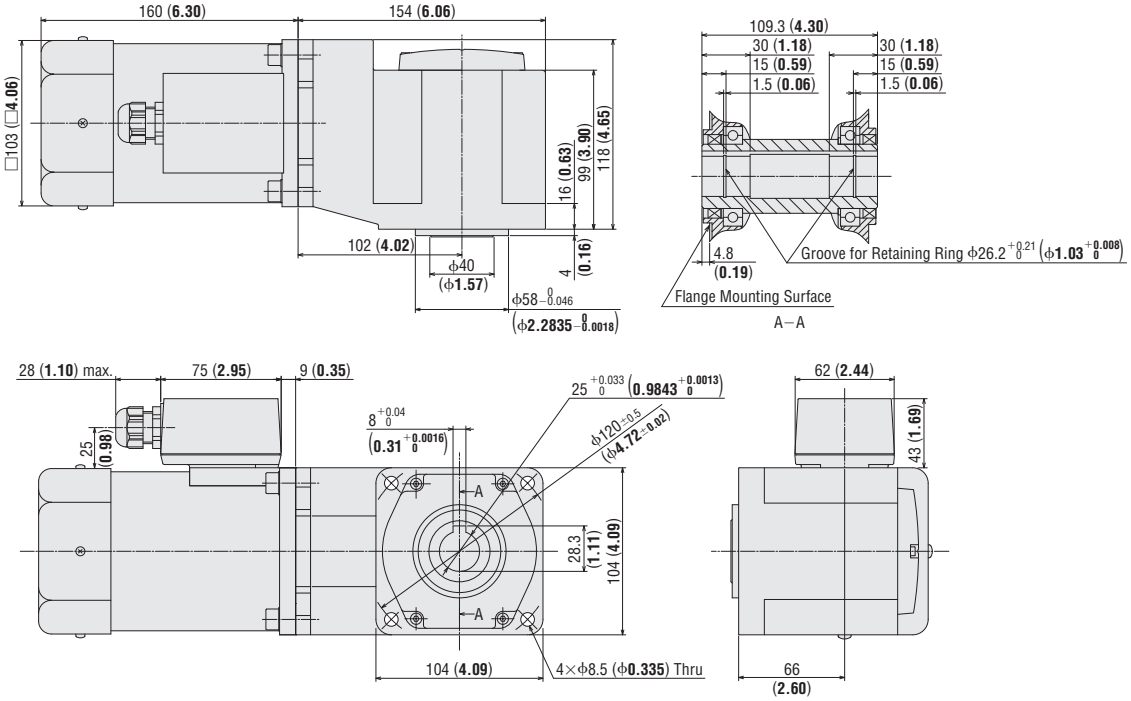

● Use cable with a diameter of φ6~φ12 mm (φ0.24~φ0.47 in.).

● Details of terminal box ➜ Page C-214

◇Combination Type: Right-Angle, Solid Shaft (Terminal Box Type)

BHI62FT-□RA, **BHI62ET-□RA**

Mass: 10.0 kg (22 lb.)

Motor: BHI62FT-G2, BHI62ET-G2

Gearhead: BH6G2-□RA

2D CAD A302

3D CAD

◇Key and Key Slot (Included)

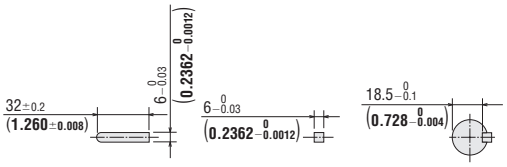

● At the time of shipment, a key is inserted on the gearhead's shaft.

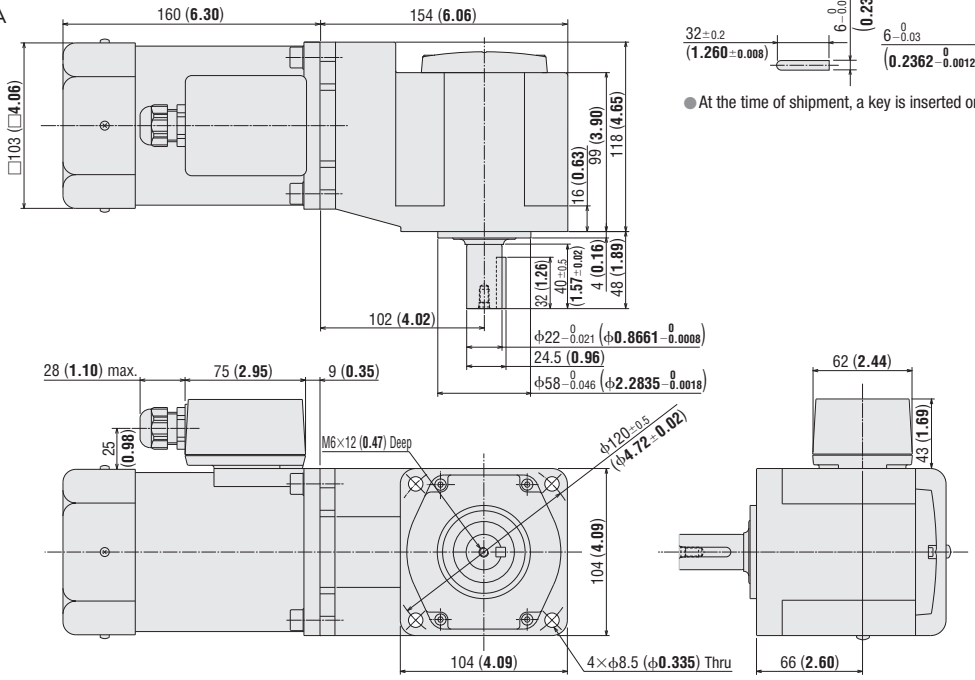

● Use cable with a diameter of φ6~φ12 mm (φ0.24~φ0.47 in.).

● Details of terminal box ➜ Page C-214

● A number indicating the gear ratio is entered where the box □ is located within the product name.

◇Combination Type: Right-Angle, Hollow Shaft (Cable Type)

BHI62F-□RH, **BHI62E-□RH**

Mass: 10.0 kg (22 lb.)

Motor: BHI62F-G2, BHI62E-G2

Gearhead: BH6G2-□RH

2D CAD A299

3D CAD

◇Key (Included)

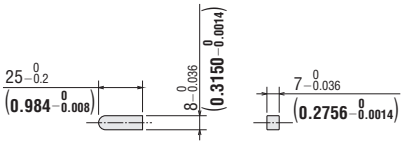

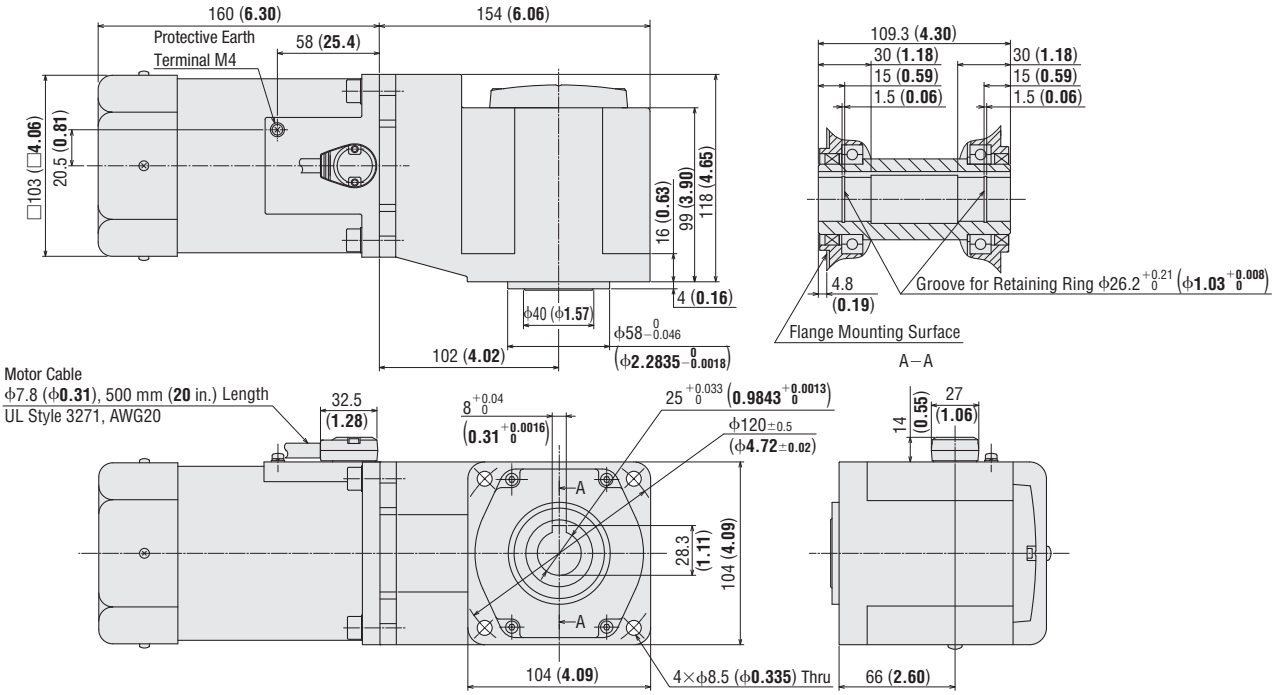

◇Combination Type: Right-Angle, Solid Shaft (Cable Type)

BHI62F-□RA, **BHI62E-□RA**

Mass: 10.0 kg (22 lb.)

Motor: BHI62F-G2, BHI62E-G2

Gearhead: BH6G2-□RA

2D CAD A300

3D CAD

◇Key and Key Slot (Included)

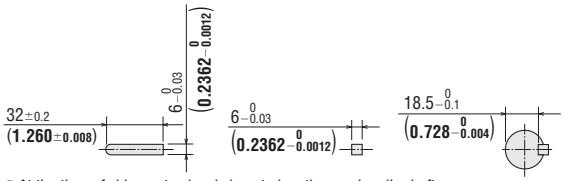

● At the time of shipment, a key is inserted on the gearhead's shaft.

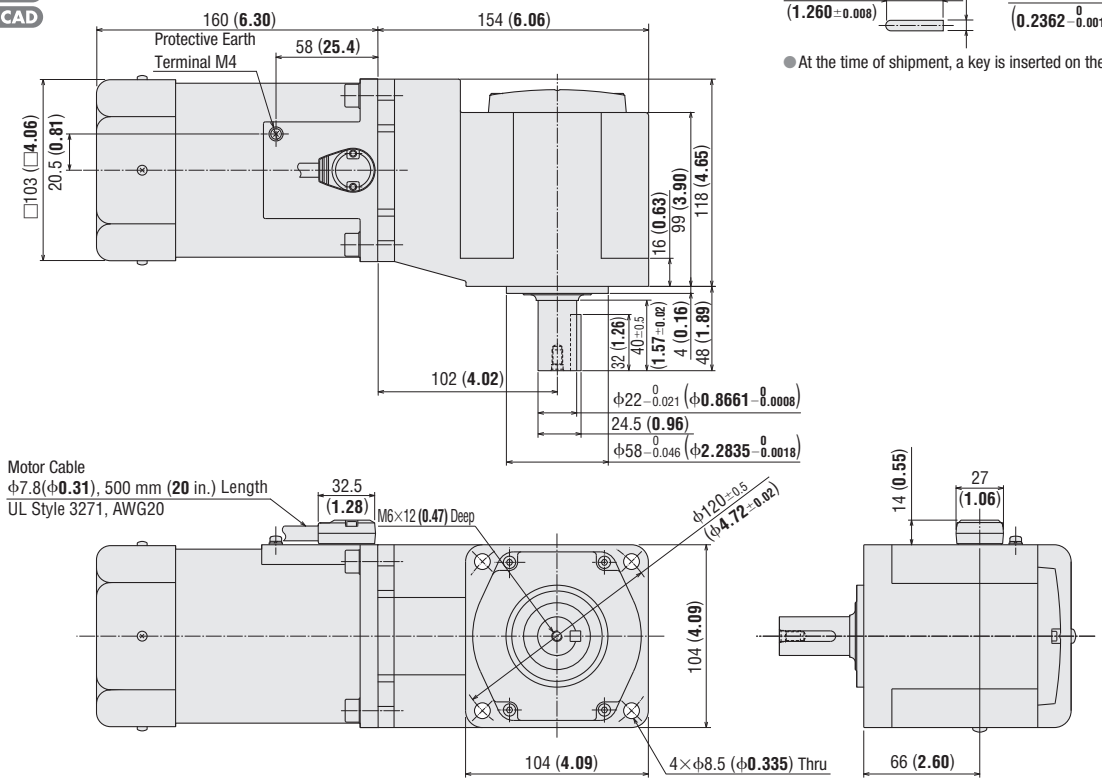

● A number indicating the gear ratio is entered where the box □ is located within the product name.

◇Combination Type: Parallel Shaft (Terminal Box Type)

BHI62FT-□, BHI62ET-□

Mass: 8.0 kg (18 lb.)

Motor: BHI62FT-G2, BHI62ET-G2

Gearhead: BH6G2-□

2D CAD A304

3D CAD

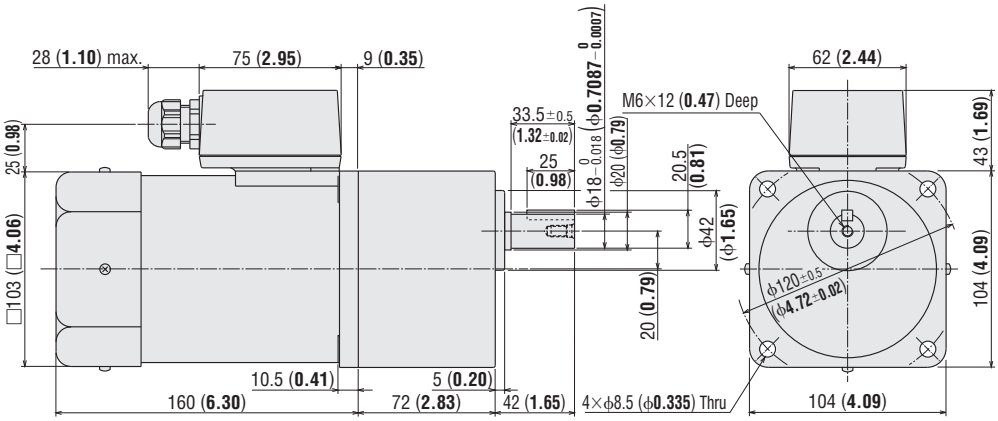

- Use cable with a diameter of ϕ6~ϕ12 mm (ϕ0.24~ϕ0.47 in.).
- Details of terminal box ➜ Page C-214

◇Combination Type: Parallel Shaft (Cable Type)

BHI62F-□, BHI62E-□

Mass: 8.0 kg (18 lb.)

Motor: BHI62F-G2, BHI62E-G2

Gearhead: BH6G2-□

2D CAD A303

3D CAD

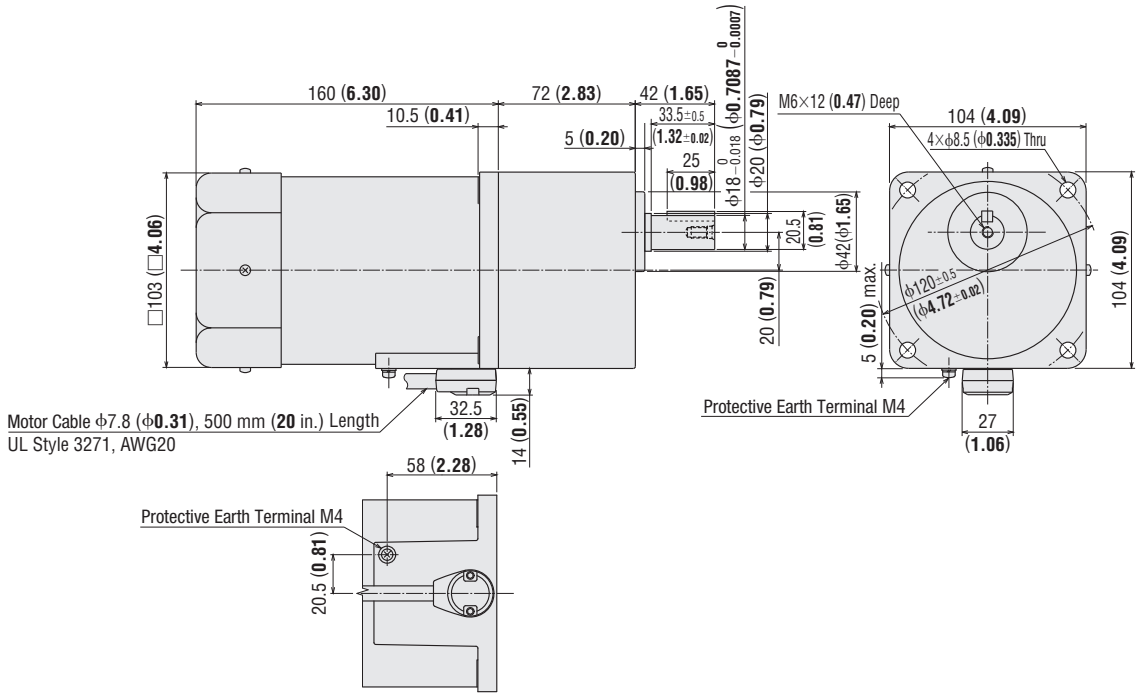

◇Key and Key Slot (Included, common as **BHI62**)

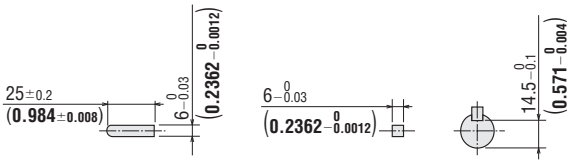

- At the time of shipment, a key is inserted on the gearhead's shaft.

- A number indicating the gear ratio is entered where the box □ is located within the product name.

Page
Features C-114 / Specifications C-119 / Connection Diagrams C-140
Motor and Gearhead Combinations C-141

◇Round Shaft Type (Terminal Box Type)

BHI62FT-A, **BHI62ET-A**

Mass: 5.0 kg (11 lb.)

2D CAD A308

3D CAD

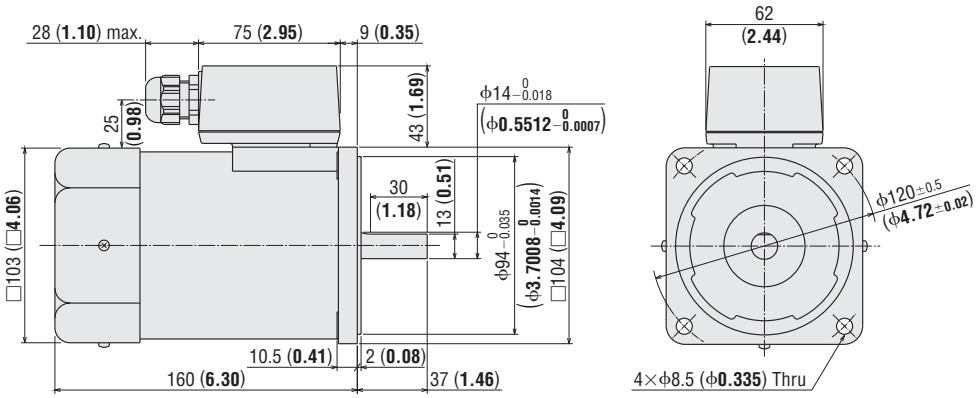

- Use cable with a diameter of ϕ6~ϕ12 mm (ϕ0.24~ϕ0.47 in.).
- Details of terminal box ➜ Page C-214

◇Round Shaft Type (Cable Type)

BHI62F-A, **BHI62E-A**

Mass: 5.0 kg (11 lb.)

2D CAD A307

3D CAD

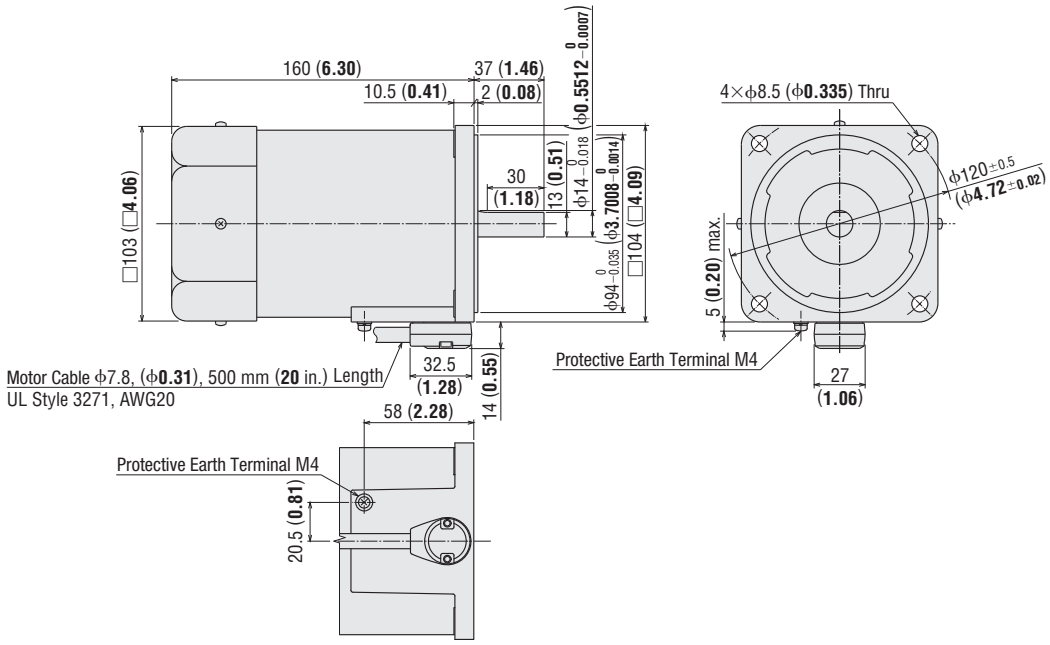

◇Capacitor (Included with single-phase motors)

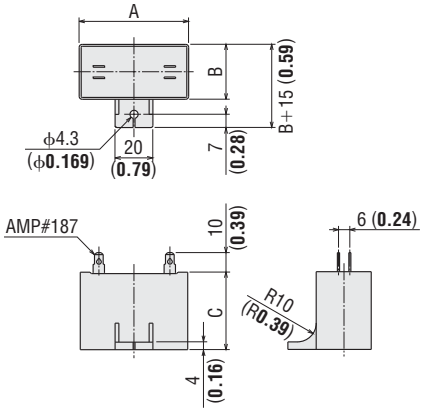

◇Capacitor Dimensions Unit: mm (in.)

Product Name		Capacitor Product Name	A	B	C	Mass g (oz.)	Capacitor Cap
Terminal Box Type	Cable Type						
BHI62FT-□RH **BHI62FT-□RA** **BHI62FT-□** **BHI62FT-A**	**BHI62F-□RH** **BHI62F-□RA** **BHI62F-□** **BHI62F-A**	CH400CFAUL2	58 (2.28)	41 (1.61)	58 (2.28)	175 (6.2)	Included
BHI62ET-□RH **BHI62ET-□RA** **BHI62ET-□** **BHI62ET-A**	**BHI62E-□RH** **BHI62E-□RA** **BHI62E-□** **BHI62E-A**	CH100BFAUL	58 (2.28)	35 (1.38)	50 (1.97)	132 (4.7)	

- A number indicating the gear ratio is entered where the box □ is located within the product name.

Connection Diagrams

- The rotation direction of the motor is indicated when viewed from the output shaft side of the motor. CW is used to indicate clockwise rotation and CCW is used for counterclockwise rotation.

Combination Type Parallel Shaft/Round Shaft Type

◇CW Rotation

Product Name	Type and Gear Ratio	
BHI62	Gear Ratio: **3**~**9**, **50**~**180** Round shaft type	Gear Ratio: **12.5**~**36**
Rotation Direction	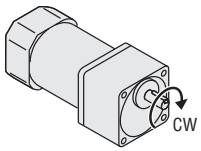	
Single-Phase Motor		
Terminal Box Type	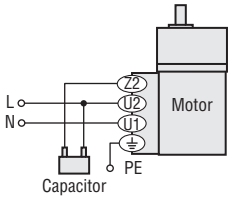	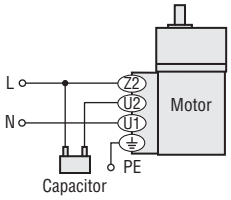
Cable Type	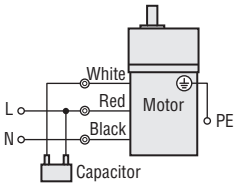	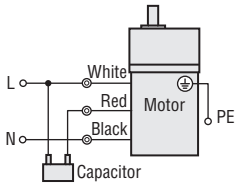

◇CCW Rotation

Product Name	Type and Gear Ratio	
BHI62	Gear Ratio: **3**~**9**, **50**~**180** Round shaft type	Gear Ratio: **12.5**~**36**
Rotation Direction	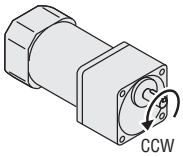	
Single-Phase Motor		
Terminal Box Type	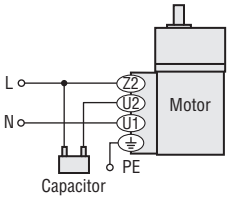	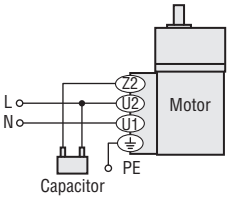
Cable Type	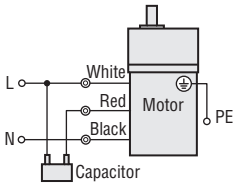	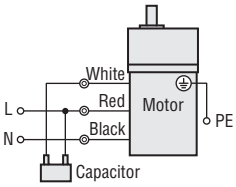

Note

- Change the direction of single-phase motor rotation only after bringing the motor to a stop.
  If an attempt is made to change the direction of rotation while the motor is rotating, the motor may ignore the reversing command or change its direction of rotation after some delay.
- Connect a CR circuit to protect the contact of switches. Connection of CR circuit, contact capacity ➜ Page C-213
- For added safety, provide a breaker or fuse on the power-supply input.

How to Connect a Capacitor

The capacitor has 4 terminals: terminal A is connected internally to terminal B, and terminal C is connected internally to terminal D, as shown in the illustration. Electrically, this creates 2 terminals.

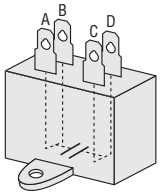

Inner Wiring Diagram for 4-Terminal Capacitor

●Combination Type Right-Angle Shaft

◇CW Rotation

Type and Gear Ratio
Solid Shaft Type Gear Ratio: **5～180** Hollow Shaft Type* Gear Ratio: **5～180**

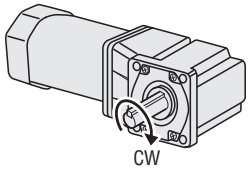

Single-Phase Motor	
Terminal Box Type	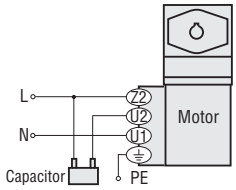
Cable Type	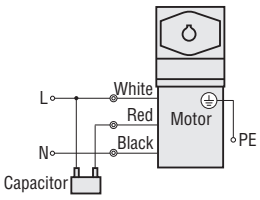

◇CCW Rotation

Type and Gear Ratio
Solid Shaft Type Gear Ratio: **5～180** Hollow Shaft Type* Gear Ratio: **5～180**

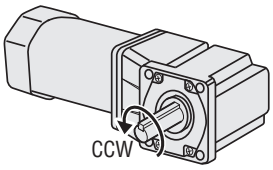

Single-Phase Motor	
Terminal Box Type	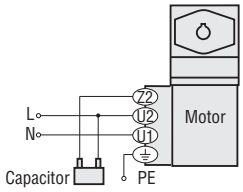
Cable Type	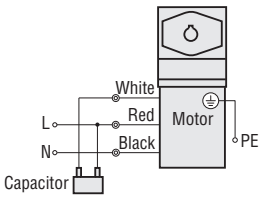

*The wiring for the hollow shaft type varies according to the direction of the load shaft installation.

Note

- Change the direction of single-phase motor rotation only after bringing the motor to a stop.
- If an attempt is made to change the direction of rotation while the motor is rotating, the motor may ignore the reversing command or change its direction of rotation after some delay.
- Connect a CR circuit to protect the contact of switches. Connection of CR circuit, contact capacity ➜ Page C-213
- For added safety, provide a breaker or fuse on the power-supply input.

●How to Connect a Capacitor

The capacitor has 4 terminals: terminal A is connected internally to terminal B, and terminal C is connected internally to terminal D, as shown in the illustration. Electrically, this creates 2 terminals.

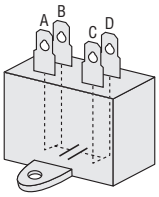

Inner Wiring Diagram for 4-Terminal Capacitor

■List of Motor and Gearhead Combinations

Motor and gearhead combinations are shown below.

●Combination Type: Right Angle Shaft

Product Name	Motor Product Name	Gearhead Product Name
BHI62FT-□RH	BHI62FT-G2	BH6G2-□RH
BHI62FT-□RA		BH6G2-□RA
BHI62F-□RH	BHI62F-G2	BH6G2-□RH
BHI62F-□RA		BH6G2-□RA
BHI62ET-□RH	BHI62ET-G2	BH6G2-□RH
BHI62ET-□RA		BH6G2-□RA
BHI62E-□RH	BHI62E-G2	BH6G2-□RH
BHI62E-□RA		BH6G2-□RA

●Combination Type: Parallel Shaft

Product Name	Motor Product Name	Gearhead Product Name
BHI62FT-□	BHI62FT-G2	BH6G2-□
BHI62F-□	BHI62F-G2	
BHI62ET-□	BHI62ET-G2	
BHI62E-□	BHI62E-G2	

- A number indicating the gear ratio is entered where the box □ is located within the product name.

Induction Motors 2-Pole, High-Speed Type

40 W (1/19 HP), 60 W (1/12 HP), 90 W (1/8 HP), 150 W (1/5 HP)

Frame Size: □80 mm (□3.15 in.), □90 mm (□3.54 in.)

Specifications – Continuous Rating

Product Name	Output Power		Voltage	Frequency	Current	Starting Torque		Rated Torque		Rated Speed	Capacitor	Overheat Protection Device
Round Shaft Type	W	HP	VAC	Hz	A	mN·m	oz-in	mN·m	oz-in	r/min	μF	
4IK40A-BW2U	40	1/19	Single-Phase 110	60	0.68	90	12.7	135	19.1	2900	7.5	TP
			Single-Phase 115		0.66							
4IK40A-DW3E	36	1/20	Single-Phase 220	50	0.30	90	12.7	145	20	2400	1.8	TP
				60	0.31			120	17.0	2900		
	40	1/19	Single-Phase 230	50	0.33			160	22	2400		
				60	0.32			135	19.1	2900		
4IK60A-BW2U	60	1/12	Single-Phase 110	60	0.98	160	22	190	26	3000	10	TP
			Single-Phase 115		0.97							
4IK60A-DW3E	55	1/14	Single-Phase 220	50	0.44	160	22	210	29	2500	2.5	TP
				60	0.51			180	25	3000		
	60	1/12	Single-Phase 230	50	0.47			230	32	2500		
				60	0.52			190	26	3000		
5IK60A-BW2U	60	1/12	Single-Phase 110	60	0.94	140	19.8	185	26	3200	14	TP
			Single-Phase 115		0.93							
5IK60A-DW3E	60	1/12	Single-Phase 220	50	0.46	120	17.0	220	31	2650	3.0	TP
				60				185	26	3200		
			Single-Phase 230	50	0.45	140	19.8	220	31	2650		
				60				185	26	3200		
5IK90A-BW2U	90	1/8	Single-Phase 110	60	1.61	240	34	280	39	3200	25	TP
			Single-Phase 115		1.57							
5IK90A-DW3E	90	1/8	Single-Phase 220	50	0.70	240	34	330	46	2650	6.0	TP
				60	0.84			280	39	3200		
			Single-Phase 230	50	0.69			330	46	2650		
				60	0.84			280	39	3200		
5IK150A-BW2U	150	1/5	Single-Phase 110	60	2.12	380	53	460	65	3200	30	TP
			Single-Phase 115		2.09							
5IK150A-DW3E	140	1/5	Single-Phase 220	50	0.98	380	53	510	72	2650	8.0	TP
				60	1.07			420	59	3200		
	150	1/5	Single-Phase 230	50	1.04			560	79	2650		
				60	1.13			460	65	3200		

TP: Contains a built-in thermal protector (automatic return type). If a motor overheats for any reason, the thermal protector is activated and the motor is stopped. When the motor temperature drops, the thermal protector closes and the motor restarts. Be sure to turn the motor power off before inspecting.

Page Features C-114 / Specifications C-119 / Connection Diagrams C-145

Product Line

Motor

Output Power	Voltage	Product Name	List Price
40 W (1/19 HP)	Single-Phase 110-115 VAC	**4IK40A-BW2U**	$93.00
	Single-Phase 220-230 VAC	**4IK40A-DW3E**	$97.00
60 W (1/12 HP)	Single-Phase 110-115 VAC	**4IK60A-BW2U**	$116.00
	Single-Phase 220-230 VAC	**4IK60A-DW3E**	$122.00
	Single-Phase 110-115 VAC	**5IK60A-BW2U**	$112.00
	Single-Phase 220-230 VAC	**5IK60A-DW3E**	$116.00
90 W (1/8 HP)	Single-Phase 110-115 VAC	**5IK90A-BW2U**	$132.00
	Single-Phase 220-230 VAC	**5IK90A-DW3E**	$138.00
150 W (1/5 HP)	Single-Phase 110-115 VAC	**5IK150A-BW2U**	$166.00
	Single-Phase 220-230 VAC	**5IK150A-DW3E**	$173.00

The following items are included with each product.
Motor, Capacitor, Capacitor Cap, Operating Manual

Dimensions Unit = mm (in.)

40 W (1/19 HP)

4IK40A-BW2U, **4IK40A-DW3E**

Mass: 1.5 kg (3.3 lb.)

2D CAD A450

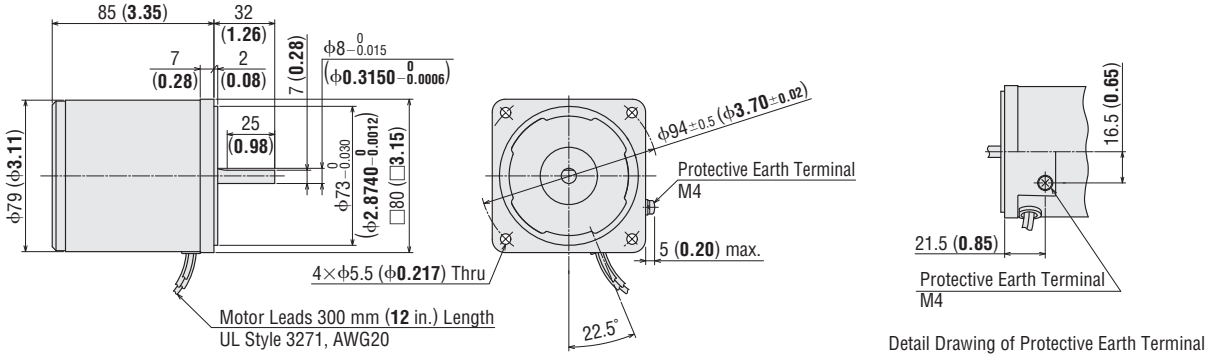

Detail Drawing of Protective Earth Terminal

60 W (1/12 HP)

4IK60A-BW2U, **4IK60A-DW3E**

Mass: 1.8 kg (4.0 lb.)

2D CAD A513

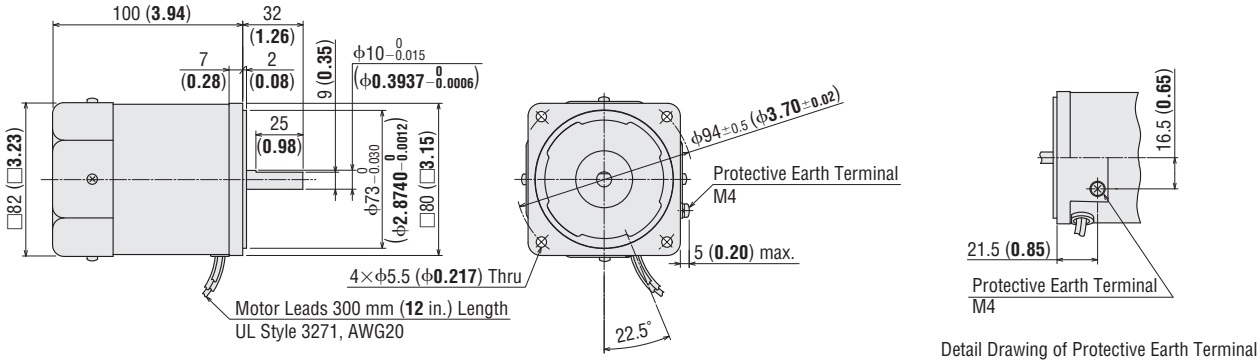

Detail Drawing of Protective Earth Terminal

5IK60A-BW2U, **5IK60A-DW3E**

Mass: 2.5 kg (5.5 lb.)

2D CAD A453

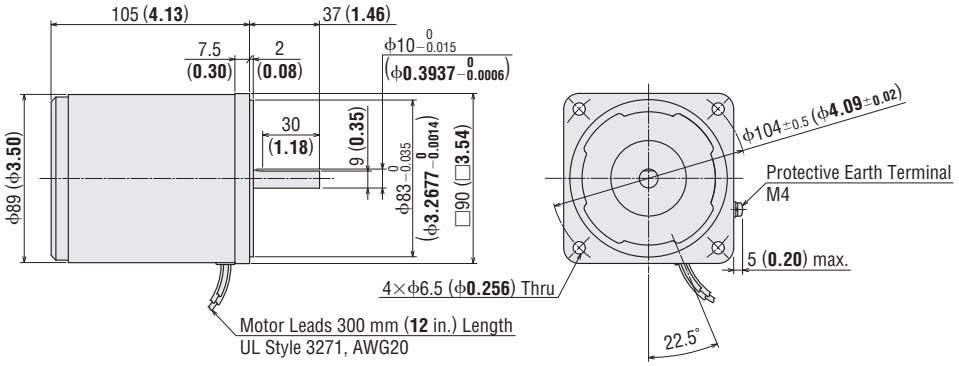

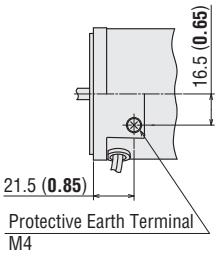

Detail Drawing of Protective Earth Terminal

●90 W (1/8 HP)

5IK90A-BW2U, **5IK90A-DW3E**

Mass: 2.7 kg (5.9 lb.)

2D CAD A456

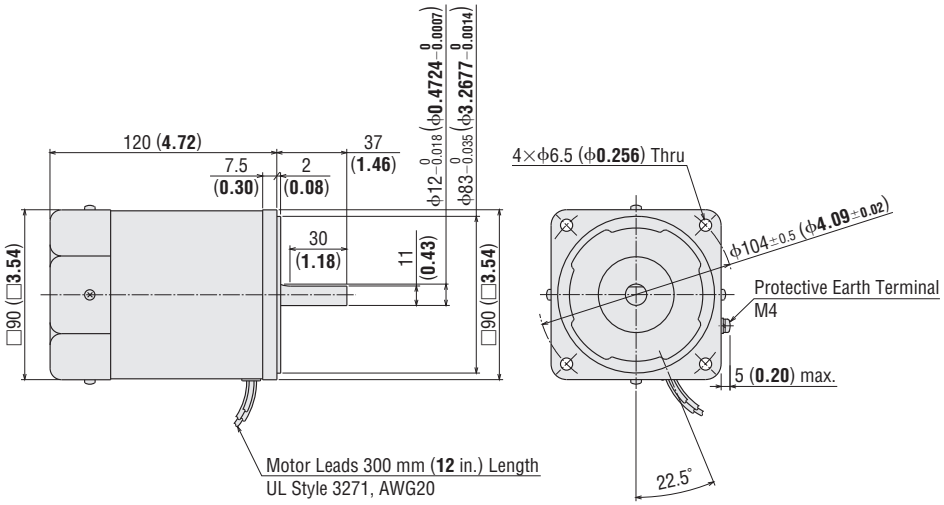

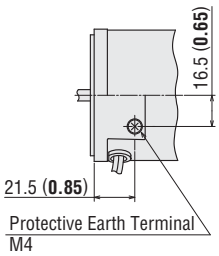

Detail Drawing of Protective Earth Terminal

●150 W (1/5 HP)

5IK150A-BW2U, **5IK150A-DW3E**

Mass: 3.2 kg (7.0 lb.)

2D CAD A459

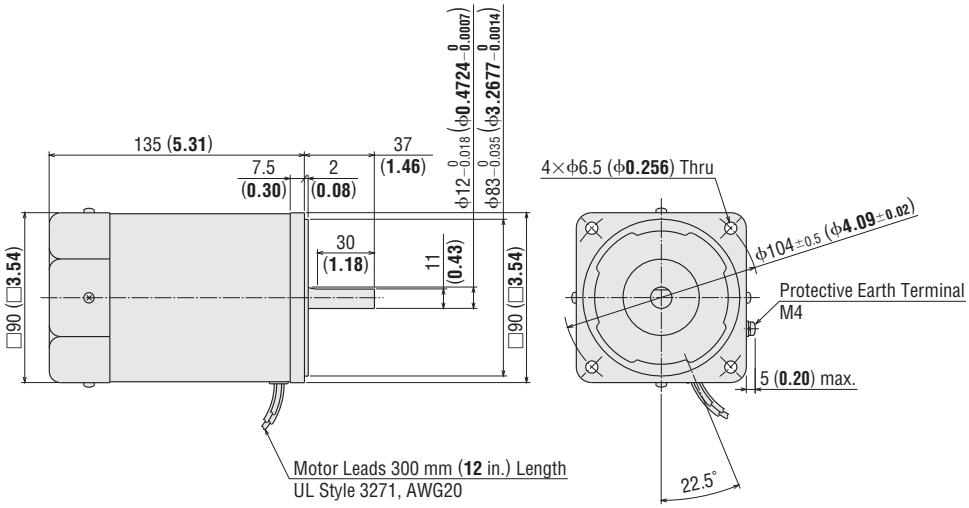

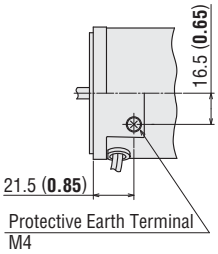

Detail Drawing of Protective Earth Terminal

●Capacitor (Included with single-phase motors)

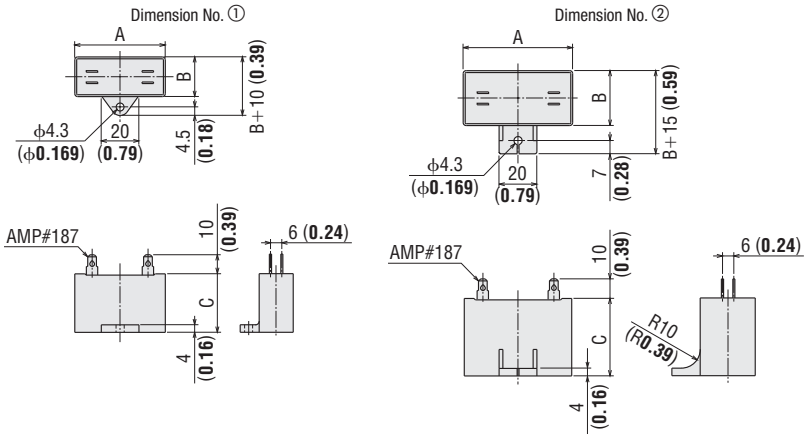

◇Capacitor Dimensions Unit: mm (in.)

Product Name	Capacitor Product Name	A	B	C	Mass g (oz.)	Dimension No.	Capacitor Cap
4IK40A-BW2U	CH75CFAUL2	48 (1.89)	21 (0.83)	31 (1.22)	41 (1.45)	①	Included
4IK40A-DW3E	CH18BFAUL	38 (1.50)	21 (0.83)	31 (1.22)	37 (1.31)	①	
4IK60A-BW2U	CH100CFAUL2	58 (2.28)	21 (0.83)	31 (1.22)	49 (1.73)	①	
4IK60A-DW3E	CH25BFAUL	48 (1.89)	21 (0.83)	31 (1.22)	42 (1.48)	①	
5IK60A-BW2U	CH140CFAUL2	58 (2.28)	22 (0.87)	35 (1.38)	61 (2.2)	①	
5IK60A-DW3E	CH30BFAUL	58 (2.28)	21 (0.83)	31 (1.22)	50 (1.77)	①	
5IK90A-BW2U	CH250CFAUL2	58 (2.28)	35 (1.38)	50 (1.97)	140 (4.9)	②	
5IK90A-DW3E	CH60BFAUL	58 (2.28)	29 (1.14)	41 (1.61)	92 (3.2)	②	
5IK150A-BW2U	CH300CFAUL2	58 (2.28)	35 (1.38)	50 (1.97)	140 (4.9)	②	
5IK150A-DW3E	CH80BFAUL	58 (2.28)	35 (1.38)	50 (1.97)	136 (4.6)	②	

Connection Diagrams

Single-Phase 110/115 VAC
Single-Phase 220/230 VAC

Clockwise

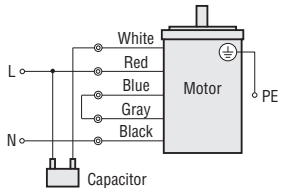

Counterclockwise

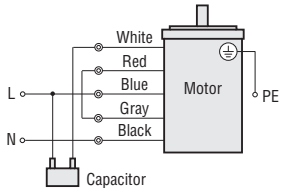

PE: Protective Earth

●Rotation Direction

The rotation direction of the motor is indicated when viewed from the output shaft side of the motor.
CW is used to indicate clockwise rotation and CCW is used for counterclockwise rotation.

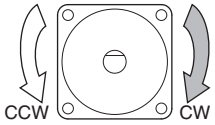

The rotation direction when viewed from the output shaft side of the motor

●Connection Method for Capacitor with 4 Terminals

The capacitor has 4 terminals: terminal A is connected internally to terminal B, and terminal C is connected internally to terminal D, as shown in the illustration. Electrically, this creates 2 terminals.

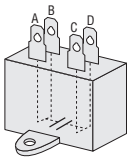

Inner Wiring Diagram for 4-Terminal Capacitor

Note

●Change the direction of single-phase motor rotation only after bringing the motor to a stop.
If an attempt is made to change the direction of rotation while the motor is rotating, motor may ignore reversing command or change its direction of rotation after some delay.